UNIT – III (PART –B)

QUEIENG THEORY

3.1 INTRODUCTION

The formation of queues or waiting lines is a most common phenomenon in our everyday life. It occurs where the current demand exceeds the current capacity to provide that service. The examples of the places where the queues may be formed are barber, shop, ration shop, cinema ticket window, bus stop, bank counters, railway, reservation counters, doctors' clinic, repair shops etc.

Queues are also formed in manufacturing industry in situations where in-process goods wait for next operation or waits for getting moved to another place. Queues may not be a physical line of customers it may be merely a list of customers, units orders etc. Some examples of such type of queues are unconnected telephone calls, waiting list of passengers for a berth, untyped paper with the typist etc.

The most important issue in waiting line problem is to decide the best level of service the organization should provide. Providing too much service would involve excessive cost on the other hand inadequate service capacity would result in long waiting lines which results in dissatisfaction of customers or sometimes loss of customers. Thus the ultimate goal is to achieve an economic balance between the cost of service and the cost associated with waiting for that service.

3.2 Elements of queuing system

The various elements of the queuing system are:

1. Input source
2. Waiting line (Queue)
3. Service discipline
4. Service mechanism
5. System output
6. Customer behavior

(1) Input source:

Two important characteristics of the input source are

a. It's size
b. The pattern of arrival

a. **It's size:** The size is the total number of customers that might require from time to time. The size of the input source is generally assumed to be infinite. The railway reservation system, tax both on highway etc are the example of infinite queue.

b. **Pattern of arrival:** The arrival of the customers may be either at a constant rate or at random. Most arrivals in a service system are at random. This is when each arrival is independent of its previous arrivals. The rate of arrival is estimated by Poisson distribution. The mean arrival rate is generally represented by the 'λ'.

(2) Queue:

A queue is characterized by the maximum permissible number of customers that it contains units requiring service systems only a limited number of customers are allowed in the system and new arrivals are not allowed to join the system unless the number become less than the limiting value.

(3) Service discipline:

It refers to the order in which the customers waiting in queue are selected for service. It may be first-come-first-served, random or according to some priority procedure. The rules governing order of service may be

a. **FIFO(First-In-First-Out/First-come-first-served):**
According to FIFO the customers are served in the order of their arrival.
Ex: Bank counters, Railway reservation counters, cinema ticker windows, bus stand etc

b. **LIFO (Last-in-first-out):**
According to LIFO the items arriving last are taken out first.
Ex: Big go downs the items arrived last are taken out first.

c. **SIRO(Service in random order):**
Sometimes certain customers are given priority for service i.e. the arriving customer is chosen for service ahead of some other customers already in the queue.
Ex: Serious patients are given priority for treatment vital machines are attended to first in the case of their breakdown; important orders are given priority in production scheduling.

(4) Service Mechanism:

Service Mechanism consists of one or more service facility each of which contains one or more parallel service channels. It is not necessary that these actually be a physical waiting line forming in front of physical structure that constitutes the service facility. Service mechanism may vary depending upon the number of service channels, number of servers, number of phases etc. The four basic structures of service mechanism are:

(a) Single Channel single phase (Single queue-single server):

In this case the arriving units form one queue to be served by a single service facility.

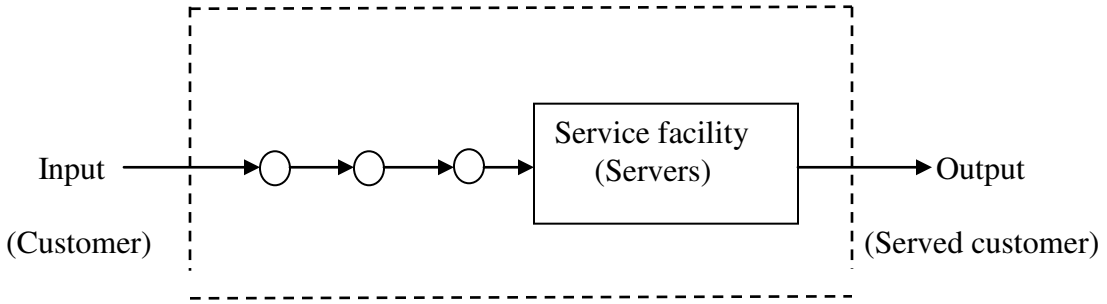

Single channel, single phase system

(b) Single channel, Multiphase (single queue, multiple servers in series):

In this case the customers are served at number of servers arranged in series. A two phase service means that once an arrival enters the service, it is served at two stations (or phase's one after the other)

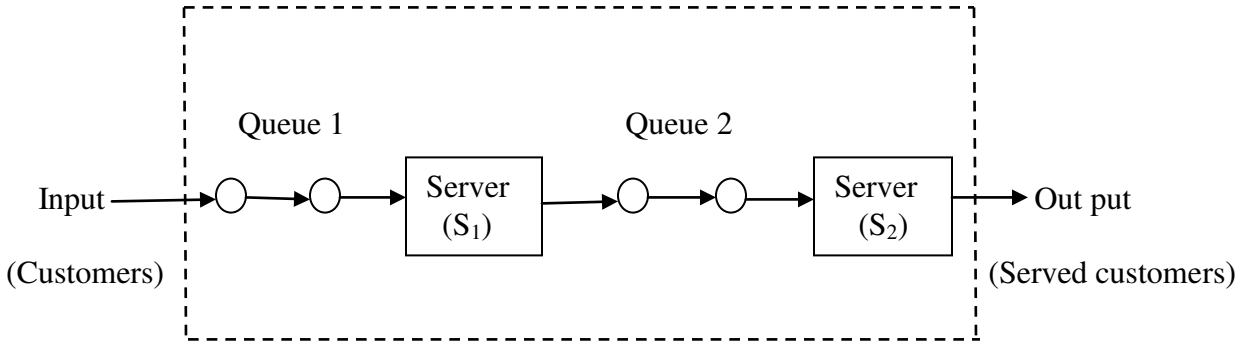

Single channel, multiphase (2- phases) system

(c) Multi channel, single phase system (single queue, multiple servers in parallel):

In this type there is a single queue and multiple servers arranged in parallel.

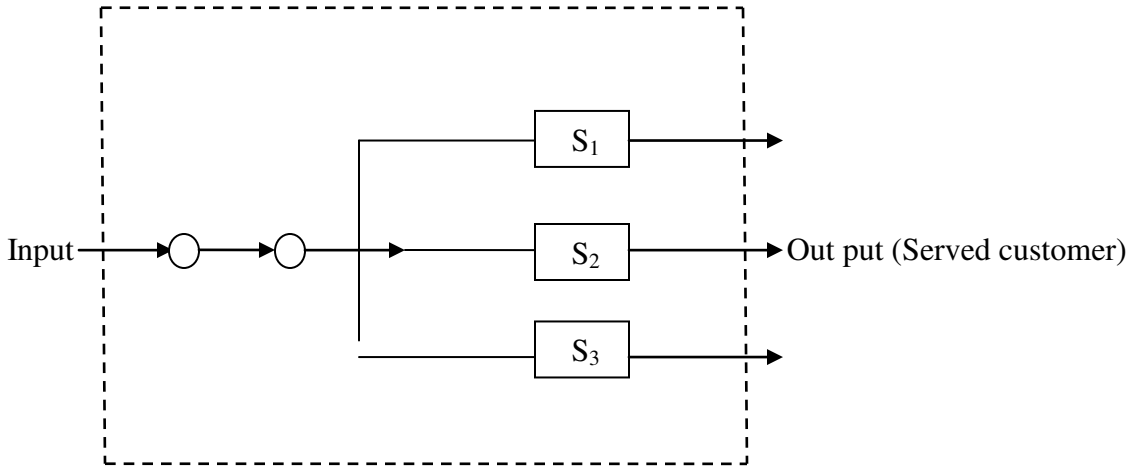

Multiple channel single phase

(d) Multiple channels, multiple phases:

In this type there are multiple channels and the customers are served at more than one server.

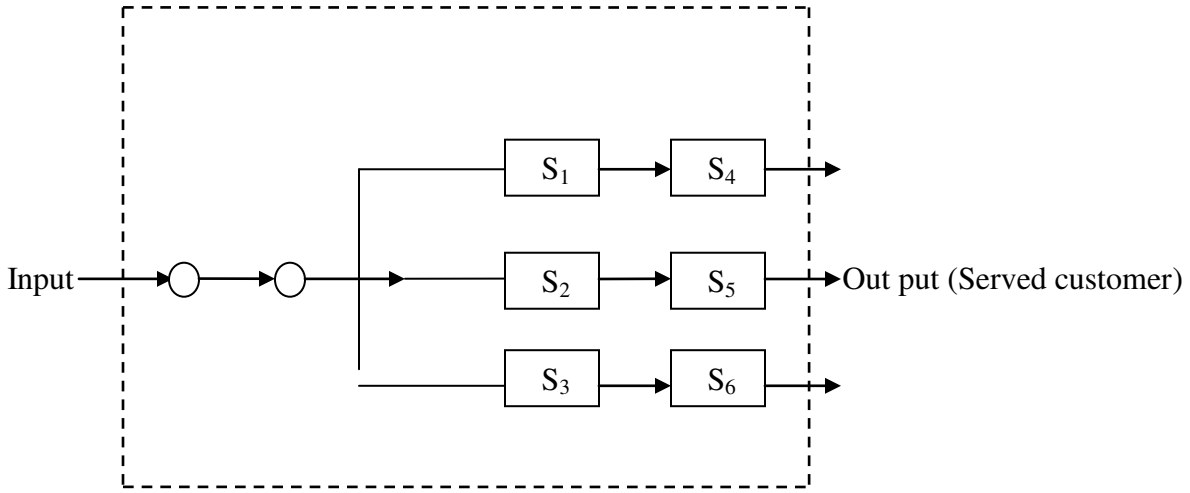

Multiple channels, multiple phases

(5) System output:

System output refers to the rate of which customers are rendered service. It depends upon service time required by that facility to render service and the arrangement of service facility. The average number of (customer) that can be served per unit time is called service rate. Service rate is denoted by 'μ'.

(6) Customer behavior:

Customer behavior implies that reactions of the typical customers about queuing system of the service mechanism. The customers generally behave in four ways

a. **Balking:** A customer may leave the queue because the queue is too long and he has no time to wait, or there is not sufficient waiting space.
b. **Reneging:** This occurs when a waiting customer leaves the queue due to impatience.
c. **Priorities:** In certain applications some customers are served before others regardless of their order of arrival. These customers have priority over others.
d. **Jockeying:** A customer may keep on switching from one queue to another, when these are more than one service counters
e. **Collusion:** The customers in the queue may demand service on their behalf as well as on behalf of others.

3.3 Characteristics of waiting lines:

The important characteristics required to study the waiting lines are:

(1) Waiting time: It is the time that a customer spends in the queue before being taken up for service.
(2) Service time: It is the time period between two successive services. It may be either constant or variable.
(3) Waiting time in the system: It implies the time spent by the customer in the queue system.

Waiting time in the system = Waiting time + service time.

(4) Queue length: It implies the number of customers waiting in the queue.
(5) System length: System Length is equal to the no. of customers in the queue plus those being served.

3.4 Terminology and notations for queuing system:

N (t) = Number of customers in queuing system of time
$P_n(t)$ = Probability of n units(customers) in queuing system
S = Number of servers in queuing system
λ_n= mean arrival rate
μ_n = mean service rate
n = mean number of units in the queuing system
L_q= Average no. of customers in the queue system (system length)
W_q= Average waiting time in the queue
W_s= Average time in the queue.

Traffic Intensity, $\rho = \frac{\text{Average arrrival rate}}{\text{Average service rate}}$

$$\rho = \frac{\lambda}{\mu} \quad \text{(for one server)}$$

$$\rho = \frac{\lambda}{c\mu} \quad \text{(for no. of server)}$$

Where C = no. of servers

3.5 QUEUING MODELS:

3.5.1Model-1:

[Single server Poisson arrivals with Exponential Service infinite population model]

Assumptions:

(1) Both the arrivals and service rates are independent of the number of customers in the waiting line
(2) The arrivals occur completely at random according to Poisson distribution
(3) There is only one queue and one service facility
(4) Arrivals are handled on First-Come-First served
(5) The mean service rate is higher than the mean arrival rate (i.e. $\mu>\lambda$).

Important formulae:

(1) Probability that there is no one in the system
[No one in the queue and no one being]

$$P_o = 1-\frac{\lambda}{\mu}$$

(2) Probability that the customer will have to wait in queue
[Probability that the service facility is busy]

$$P_b = 1-P_o = \frac{\lambda}{\mu}$$

(3) Probability that there are 'n' customers in the queue system

$$P_n = (1-\frac{\lambda}{\mu})\left(\frac{\lambda}{\mu}\right)^n$$

(4) Average expected number of customers in the queue length,

$$L_q = \frac{\lambda^2}{\mu(\mu-\lambda)}$$

(5) Average expected no. of customers in the queue system

$$\text{System length } L_s = \frac{\lambda}{\mu-\lambda}$$

(6) Expected length of non-empty queue

$$L_b = \frac{\mu}{(\mu-\lambda)}$$

(7) Average waiting time in the queue

$$W_q = \frac{\lambda}{\mu(\mu-\lambda)}$$

(8) Average waiting time in the queue system

$$W_s = \frac{1}{\mu-\lambda}$$

PROBLEMS:

(1) Customers arrive at one person barber shop according to a Poisson process with a mean inter-arrival time of 20minutes. Customers spend on an average of 15 minutes in the barber; chair
   (a) What is the probability that a new arrival need not wait for the barber to be free?
   (b) What is the expected number of customers in the barber shop?
   (c) How much time can a customer expect to wait for his turn?
   (d) How much time can a customer expect to spend in the shop?

Management will put in another chair and line another barber when a customer's average time in the shop exceeds 1.25 hours. How much must the average rate of arrival, increase to warrant a second barber?

SOLUTION:

Arrival rate (λ) = $\frac{60}{30}$ = 3hr

Service rate (μ) = $\frac{60}{15}$ = 4hr

(a) The probability that a new arrival need not wait for the barber i.e., the probability that there is no one in the system

$$P_0 = 1 - \frac{\lambda}{\mu} = 1 - \frac{3}{4} = \frac{4-3}{4} = \frac{1}{4} = 0.25$$

(b) Expected no. of customers in the barber shop

$$\text{System length, } L_s = \frac{\lambda}{\mu-\lambda} = \frac{3}{4-3} = 3$$

(c) The time the customer expects to wait for this turn (Average waiting time in the queue)

$$W_q = \frac{\lambda}{\mu(\mu-\lambda)} = \frac{3}{4(4-3)} = \frac{3}{4}\text{ hr} = 45\text{min}$$

(d) The time customer expects to spend in the shop
(Average waiting time in the queue system)

$$W_s = \frac{1}{\mu-\lambda} = \frac{1}{4-3} = 1\text{hr} = 60\text{min}$$

(e) Let customers average waiting time = 1.25hr

Then $W_q = 1.25$

$$W_q = \frac{\lambda}{\mu(\mu-\lambda)}$$

$$1.25 = \frac{\lambda}{4(4-\lambda)}$$

$$1.25 = \frac{\lambda}{(16-4\lambda)}$$

$$1.25(16-4\lambda) = \lambda$$

$$20-5\lambda = \lambda$$

$$6\lambda = 20 \Rightarrow \lambda = \frac{20}{6}$$

$$\lambda = 3.333$$

(2) Arrivals at a telephone booth are considered to be Poisson with an average time of 10 minutes between one arrival and the next. The length of the phone calls is assumed to be distributed exponentially with a mean of 3minutes.

a. What is the probability that a person arriving at the booth will have to wait?
b. What is the average length of the queue that is formed from time to time?
c. The telephone company will install a second booth when convinced that an arrival that an arrival would have to wait at least three minutes for the phone to be free. By how much must flow of arrivals be increased in order to justify a second booth

SOLUTION:

λ = Arrival rate = $\frac{60}{10}$ = 6 per hr

μ = service rate = $\frac{60}{3}$ = 20 per hr

(a) Probability that a person arriving at the booth will have to wait

$$P_b = 1 - P_o = \frac{\lambda}{\mu} = \frac{6}{20} = 0.30$$

(b) Average length of queue(Formed from time to time)

$$L_b = \frac{\mu}{(\mu-\lambda)} = \frac{20}{(20-6)} = \frac{20}{14} = 1.43$$

(c) Average waiting time in the queue

$$W_q = \frac{\lambda}{\mu(\mu-\lambda)} = \frac{3}{60} = \frac{1}{20}$$

$$\frac{1}{20} = \frac{\lambda 1}{20(20-\lambda 1)}$$

$$20(20-\lambda_1) = 20\lambda_1$$

$$400-20\lambda_1 = 20\lambda_1$$

$$400 = 40\lambda_1$$

$$\lambda_1 = 10/\text{hr}$$

New arrival rate

$\therefore$ Increase in flow of arrival = $\lambda_1 - \lambda$
= 10 - 6
= 4 per hr.

(3) Customers arrive at a sales counter manned by a single person according to a Poisson process with a mean rate of 20per hour. The time required to serve a customer has an exponential distribution with a mean of 100 seconds. Find the average waiting time of a customer.

SOLUTION:

λ = Arrival rate = 20 per hr

μ = service rate = 100 seconds = $\frac{60\times60}{100}$ = 36 per hr

The average waiting time of a customer in the queue is given by

$$W_q = \frac{\lambda}{\mu(\mu-\lambda)}$$
$$= \frac{20}{36(36-20)}$$
$$= \frac{5}{(36\times4)}$$
$$= \frac{5}{144} \text{ per hour}$$
$$= \frac{5}{144}\times3600$$
$$= 1.25 \text{ seconds}$$

The average waiting time of a customer in the system in given by

$$W_s = \frac{1}{\mu-\lambda}$$
$$= \frac{1}{36-20}$$
$$= \frac{1}{16} \text{ per hour}$$
$$= \frac{1}{16}\times 3600$$
$$= 225 \text{ seconds.}$$

(4) Telephone users arrive at a booth following a Poisson distribution with an average time of 5minutes between one arrival and the next. The time taken for a telephone call is on an average 3 minutes and it follows an exponential distribution. What is the probability that the booth is busy? How many more booths should be established to reduce the waiting time to less than or equal to half of the present waiting time?

SOLUTION:

Arrival rate, λ = 12 per hour
Service rate, μ = 20per hour

Probability that booth is busy

$$P_b = 1 - P_o = \frac{\lambda}{\mu} = \frac{12}{20} = 0.60$$

Average awaiting time in queue

$$W_q = \frac{\lambda}{\mu(\mu-\lambda)} = \frac{12}{20(20-12)} = \frac{3}{40} \text{ hr}$$

Average waiting time in system

$$W_s = \frac{1}{\mu-\lambda} = \frac{1}{20-12} = \frac{1}{8} \text{ hr}$$

In case waiting time is required to be reduced to half. For this we can multiply waiting time with $\frac{1}{2}$

$$W_s = \frac{1}{\mu-\lambda}$$

$$\frac{1}{2} \times \frac{1}{8} = \frac{1}{\mu_1 - 12}$$

$$\frac{1}{16} = \frac{1}{\mu_1 - 12}$$

$$\mu_1 - 12 = 16$$

$$\mu_1 = 16+12 = 28 \text{ per hour}$$

3.5.2 Model 2 (M/M/C) (FCFS/∞/∞):

Multi channel queuing theory. Multi channel (multi station) queuing theory is applicable when there are several servers in the service facility to provide the service. The servers are arranged in parallel and each in the waiting line can be served by any one of the servers.

Assumptions:

1. There are several servers in the service facility. The servers are arranged in parallel.
2. The customers wait in a single queue until any one of the server becomes free to render the service.
3. The service discipline in **FCFS** i.e., first come first served basis.
4. The arrival rate $\boldsymbol{\lambda}$ and the service rate $\boldsymbol{\mu}$ are mean values from Poisson distribution and exponential distribution respectively.
5. The service rate in same for each server.
6. The average arrival rate is less than the combined average service rate of all servers i.e., $\boldsymbol{\lambda < c.\mu}$ where, **c** = number of servers.

7. The queue is of infinite length.

Important Formulae:

(1) Probability that there is no customer in the system (P_0)

$$P_0 = \left[\sum_{n=0}^{n=c-1} \frac{1}{n!} \left(\frac{\lambda}{\mu}\right)^n + \frac{1}{c!} \left(\frac{\lambda}{\mu}\right)^c . \frac{c.\mu}{c.\mu-\lambda}\right]^{-1}$$

(2) Probability that there are n customers in the system (P_n)

$$P_n = \left(\frac{\lambda}{\mu}\right)^n .P_0 \text{ for } n < c$$

(3) Average number of customers in the queue.

$$L_q = \frac{\lambda.\mu\left(\frac{\lambda}{\mu}\right)^c}{(c-1)!(c.\mu-\lambda)^2} .P_0$$

(4) Average number of customers in the system

$$L_s = \frac{\lambda.\mu\left(\frac{\lambda}{\mu}\right)^c}{(c-1)!(c.\mu-\lambda)^2} .P_0 + \frac{\lambda}{\mu}$$

i.e., $L_s = L_q + \frac{\lambda}{\mu}$

(5) Average waiting time in the queue

$$W_q = \frac{\mu .\left(\frac{\lambda}{\mu}\right)^c}{(c-1)!(c.\mu-\lambda)^2} .P_0$$

i.e. $W_q = \frac{Lq}{\lambda}$

(6) Average waiting time in the system

$$W_s = \frac{\mu .\left(\frac{\lambda}{\mu}\right)^c}{(c-1)!(c.\mu-\lambda)^2} .P_0 + \frac{1}{\mu}$$

i.e. $W_s = \frac{Ls}{\lambda}$

(7) Utilization rate $\rho = \frac{\lambda}{c.\mu}$

(8) Probability that a customer has to wait

$$P\ (n \geq c) = \frac{\mu \left(\frac{\lambda}{\mu}\right)^c}{(c-1)!(c\mu-\lambda)} \ .P_0$$

(9) Probability that a customer enters the service without waiting

1-P (n ≥ c) from above.

PROBLEMS:

(1) A post office has 3 windows providing the same service. It receives on an average 30 customers per hour. Arrivals are Poisson distribution and service time is exponentially distributed. Each window serves as an average 12 customers per hour.

(a) What is the probability that a customer will be served immediately?

(b) What is the probability that a customer will have to wait?

(c) What is the average number of customers in the system?

(d) What is the average total time a customer must spend in the post office?

SOLUTION:

Now, c = 3, λ = 30,μ =12; and $\frac{\lambda}{\mu} = \frac{30}{12} = \frac{5}{2}$

(a) Probability having no customers in the system = probability that a customer will be served immediately.

$$P_0 = \frac{1}{\sum_{n=0}^{n=c-1} \frac{1}{n!} \left(\frac{\lambda}{\mu}\right)^n + \frac{1}{c!} \left(\frac{\lambda}{\mu}\right)^c . \frac{c.\mu}{c.\mu-\lambda}}$$

$$P_0 = \frac{1}{\left[1+\frac{\lambda}{\mu}+\frac{1}{2}\left(\frac{\lambda}{\mu}\right)^2\right]+\left[\frac{\left(\frac{\lambda}{\mu}\right)^3}{6}\times\frac{3\mu}{3\mu-\lambda}\right]}$$

$$= \frac{1}{\left[1+\frac{5}{2}+\frac{25}{8}\right]+\left[\frac{1}{6}\times\frac{125}{8}\times\frac{3\times12}{3\times12-30}\right]}$$

$$= \frac{1}{178/8} = \frac{8}{178} = 0.0449$$

(b) The probability that a customer will have to wait

$$P\ (n \geq c) = \frac{\mu \left(\frac{\lambda}{\mu}\right)^c}{(c-1)!(c\mu-\lambda)} .P_0$$

$$= \frac{12 .\left(\frac{5}{2}\right)^3}{(3-1)!(3\times12-30)} . P_0$$

$$= \frac{12\times\frac{125}{8}}{2\times6} \times \frac{8}{178}\ \frac{125}{178} = 0.702$$

(c) Average number of customers in the system

$$L_s = L_q + \frac{\lambda}{\mu}$$

L_q= Average no. of customers in the queue

$$= \frac{\lambda.\mu\left(\frac{\lambda}{\mu}\right)^c}{(c-1)!(c.\mu-\lambda)^2} .P_0$$

$$= \frac{30\times12\left(\frac{5}{2}\right)^3}{2.(3\times12-30)^2} \times \frac{8}{178}$$

$$= \frac{360\times125}{8\times2\times36} \times \frac{8}{178} = \frac{625}{178}$$

And $L_s = \frac{625}{178} + \frac{5}{2}$ =3.51+2.5

(d) The average total time a customer spends in the post office

$$W_s = \frac{\mu .\left(\frac{\lambda}{\mu}\right)^c}{(c-1)!(c.\mu-\lambda)^2} .P_0 + \frac{1}{\mu}$$

$$= \frac{12.\left(\frac{5}{2}\right)^3}{(3-1)!(3\times12-30)^2} . \frac{8}{178} + \frac{1}{12}$$

$$W_s = \frac{Ls}{\lambda} = \frac{6}{30} = \frac{1}{5} = 0.20 \text{ hrs.} = 12 \text{ mins.}$$

(2) Sunil Medicals is manned by three salesmen. Any salesman can provide desired service to any customer. The customers arrive at the counter according to Poisson distribution at an average rate of 30 per hour. The service time is exponential with a mean rate of 3 minutes.

(a) What fraction of time are all three attendants busy?

(b) What is the mean number of customers waiting to be attended?

(c) What average time does a customer spend at the shop?

(d) What is the probability that a customer has to wait?

SOLUTION:

Now, c = 3, λ = 30 per hr.,$\mu = \frac{60}{3} = 20 per\ hour$; and $\frac{\lambda}{\mu} = \frac{30}{20} = \frac{3}{2}$

(a)The fraction of time all the attendants are busy i.e., utilization factor.

$$\rho = \frac{\lambda}{c.\mu} = \frac{30}{3\times 20} = 0.50$$

(b) Mean number of customers waiting to be attended

$$L_q = \frac{\lambda.\mu\left(\frac{\lambda}{\mu}\right)^c}{(c-1)!(c.\mu-\lambda)^2}$$

It is therefore necessary to calculate P_0 first.

Now $$P_0 = \frac{1}{\sum_{n=0}^{n=c-1}\frac{1}{n!}\left(\frac{\lambda}{\mu}\right)^n + \frac{1}{c!}\left(\frac{\lambda}{\mu}\right)^c . \frac{c.\mu}{c.\mu-\lambda}} = \frac{1}{\sum_{n=0}^{2}\frac{1}{n!}\left(\frac{\lambda}{\mu}\right)^n + \frac{1}{3!}\left(\frac{\lambda}{\mu}\right)^3 . \frac{3\mu}{3\mu-\lambda}}$$

i.e. $$P_0 = \frac{1}{\left[1+\frac{\lambda}{\mu}+\frac{1}{2}\left(\frac{\lambda}{\mu}\right)^2\right]+\left[\frac{\left(\frac{\lambda}{\mu}\right)^3}{6}\times\frac{3\mu}{3\mu-\lambda}\right]}$$

$$= \frac{1}{\left[1+\frac{3}{2}+\frac{1}{2}\times\frac{9}{4}\right]+\left[\frac{27}{48}\times\frac{3\times 20}{3\times 20-30}\right]}$$

$$= \frac{1}{\frac{29}{8}+\frac{9}{8}} = \frac{8}{38} = \frac{4}{19} = 0.21$$

Average number of customers in the system

$$L_q = \frac{\lambda.\mu\left(\frac{\lambda}{\mu}\right)^c}{(c-1)!(c.\mu-\lambda)^2} .P_0$$

$$= \frac{30\times20.\left(\frac{3}{2}\right)^3}{2.(3\times20-30)} . \frac{4}{19} = \frac{600\times27}{8\times2\times36} \times \frac{4}{19} = \frac{135}{19}$$

i.e., $L_q = \frac{135}{19} = 7.1053$

(c) Average time a customer spends in the shop

$W_s = \frac{Ls}{\lambda}$ where $L_s = L_q + \frac{\lambda}{\mu}$

$$L_s = \frac{135}{19} + \frac{30}{20} = \frac{135+57}{38} = \frac{192}{38} = \frac{96}{19}$$

And $W_s = \frac{Ls}{\lambda} = \frac{96}{19} \times \frac{1}{30} = \frac{16}{95} = 0.1684$

(d) Average waiting time for a customer.

$$W_q = \frac{Lq}{\lambda} = \frac{135}{19} \times \frac{1}{30} = \frac{9}{38} = 0.2368$$

(e) Probability a customer has to wait

$$P\ (n\geq c) = \frac{\mu\left(\frac{\lambda}{\mu}\right)^c}{(c-1)!(c\mu-\lambda)} .P_0$$

$$= \frac{20\times\left(\frac{3}{2}\right)^3}{2.(3\times20-30)} \times \frac{4}{19}$$

$$= \frac{20\times27}{8\times2\times30} \times \frac{4}{19} = \frac{9}{38} = 0.2368$$