UNIT-IV

PILE FOUNDATION

Types of Piles:

Piles can by classified on the basis of following characteristics:

1. Mechanism of Load Transfer
2. Method of Installation
3. Type of Materials

Classification of Piles on the basis of load transfer

Types of piles based on the mechanism of Load Transfer:

End/Point Bearing Piles:

If a bedrock or rocklike material is present at a site within a reasonable depth, piles can be extended to the rock surface. In this case, the ultimate bearing capacity of the pile depends entirely on the underlying material; thus the piles are called end or point bearing piles. In most of these cases the necessary length of the pile can be fairly well established.

Instead of bedrock, if a fairly compact and hard stratum of soil is encountered at a reasonable depth, piles can be extended a few meters into the hard stratum.

Friction Piles:

In these types of piles, the load on pile is resisted mainly by skin/friction resistance along the side of the pile (pile shaft). Pure friction piles tend to be quite long, since the load-carrying. Capacity is a function of the shaft area in contact with the soil. In cohesion less soils, such as sands of medium to low density, friction piles are often used to increase the density and thus the shear strength. When no layer of rock or rocklike material is present at a reasonable depth at a site, point/end bearing piles become very long and uneconomical. For this type of subsoil condition, piles ate driven through the softer material to specified depth.

Friction cum end bearing piles

In the majority of cases, however, the load-carrying capacity is dependent on both **end-bearing** and **shaft friction**.

Driven or displacement piles

They are usually pre-formed before being driven, jacked, screwed or hammered into ground. This category consists of driven piles of steel or precast concrete and piles formed by driving tubes or shells

which are fitted with a driving shoe. The tubes or shells which are filled with concrete after driving Also included in this category are piles formed by placing concrete as the driven piles are withdrawn.

Bored or Replacement piles

They require a hole to be first bored into which the pile is then formed usually of reinforced concrete. The shaft (bore) may be eased or uncased depending upon type of soil.

Types of Piles based on Materials
Timber piles

- Timber piles are made of-tree trunks driven with small end as a point
- Maximum length: 35 m; optimum length: 9 - 20m
- Max load for usual conditions: 450 kN; optimum load range = 80 - 240 kN

Disadvantages of using timber piles:

Difficult to splice, vulnerable to damage in hard driving, vulnerable to decay unless treated with preservatives (If timber is below permanent Water table it will apparently last forever), if subjected to alternate wetting & drying, the useful life will be short, partly embedded piles or piles above Water table are susceptible to damage from wood borers and other insects unless treated.

Advantages:

Comparatively low initial cost, permanently submerged piles are resistant to decay, easy to handle, best suited for friction piles in granular material.

Steel piles

- Maximum length practically unlimited, optimum length: 12-50m
- Load for usual conditions = maximum allowable stress x cross-sectional area
- The members are usually rolled HP shapes/pipe piles. Wide flange beams & I beams proportioned to withstand the hard driving stress to which the pile may be subjected. In HP pile the flange thickness = web thickness, piles are either welded or seamless steel pipes, which may be driven either open ended or closed end. Closed end piles are usually filled with concrete after driving.
- Open end piles may be filled but this is not often necessary., dm

Advantages of steel piles:

Easy to splice, high capacity, small displacement, able to penetrate through light obstructions, best suited for end bearing on rock, reduce allowable capacity for corrosive locations or provide corrosion protection.

Disadvantages:

- Vulnerable to corrosion.
- HP section may be damaged/deflected by major obstruction

Concrete Piles

- Concrete piles may be precast, prestressed, cast in place, or of composite construction
- Precast concrete piles may be made using ordinary reinforcement or they may be prestressed.
- Precast piles using ordinary reinforcement are designed to resist bending stresses during picking up & transport to the site & bending moments from lateral loads and to provide sufficient resistance to vertical loads and any tension forces developed during driving.
- Prestressed piles are formed by tensioning high strength steel prestress cables, and casting the concrete about the cable. When the concrete hardens, the prestress cables are cut, with the tension force in the cables now producing compressive stress in the concrete pile. It is common to higher-strength concrete (35 to 55 MPa) in prestressed piles because of the large initial compressive stresses from prestressing. Prestressing the piles, tend to counteract any tension stresses during either handling or driving.
- Max length: 10 - 15 m for precast, 20 - 30 m for prestressed
- Optimum length 10 - 12 m for precast. 18 - 25m prestressed
- Loads for usual conditions 900 for precast. 8500 kN for prestressed
- Optimum load range: 350 - 3500 kN

Advantages:

1. High load capacities, corrosion resistance can be attained, hard driving possible
2. Cylinder piles in particular are suited for bending resistance.
3. Cast in place concrete piles are formed by drilling a hole in the ground & filling it with concrete. The hole may be drilled or formed by driving a shell or casing into the ground.

Disadvantages:

1. Concrete piles are considered permanent, however certain soils (usually organic) contain materials that may form acids that can damage the concrete.
2. Salt water may also adversely react with the concrete unless special precautions are taken when the mix proportions are designed. Additionally, concrete piles used for marine structures may undergo abrasion from wave action and floating debris in the water.
3. Difficult to handle unless prestressed, high initial cost, considerable displacement, prestressed piles are difficult to splice.
4. Alternate freezing thawing can cause concrete damage in any exposed situation.

Composite piles

In general, a composite pile is made up of two or more sections of different materials or different pile types. The upper portion could be eased cast-in-place concrete combined with a lower portion of

timber, steel H or concrete filled steel pipe pile. These piles have limited application and arc employed under special conditions.

Load carrying capacity of piles based on Static Formulae:

The ultimate bearing capacity of a pile is the maximum load which it can carry without failure or excessive settlement of the ground.

The bearing capacity of a pile depends primarily on 3 factors as given below,

1. Type of soil through which pile is embedded
2. Method of pile installation
3. Pile dimension (cross section & length of pile)

While calculating pile load capacity for cast in situ concrete piles, using static analysis, we need to use soil shear strength parameter and dimension of pile.

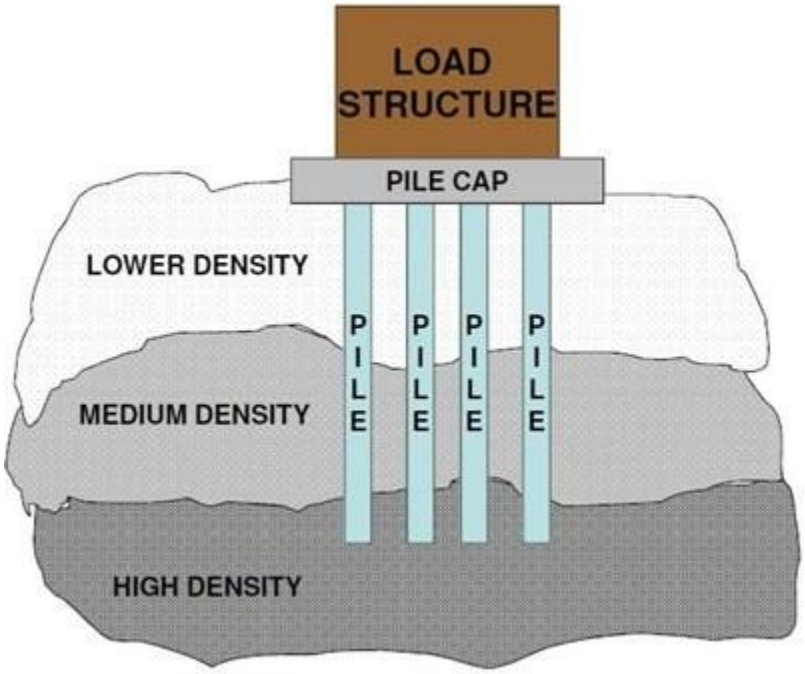

LOAD CARRYING CAPACITY OF PILE USING STATIC ANALYSIS

The pile transfers the load into the soil in two ways. Firstly, through the tip-in compression, termed as "*end-bearing*" or "*point-bearing*"; secondly, by shear along the surface termed as "*skin friction*".

Load Carrying Capacity Of Cast In-Situ Piles In Cohesive Soil

The ultimate load carrying capacity (Qu) of pile in cohesive soils is given by the formula given below, where the first term represents the *end bearing resistance* (Qb) and the second term gives the *skin friction resistance* (Qs).

$$Q_u = [A_p N_c c_p] + \left[\sum_{i=1}^{n} \alpha_i c_i A_{si}\right]$$

Where,

Qu = Ultimate load capacity, kN

Ap = Cross-sectional area of pile tip, in m2

Nc = Bearing capacity factor, may be taken as 9

αi = Adhesion factor for the ith layer depending on the consistency of soil. It depends upon the undrained shear strength of soil and may be obtained from the figure given below.

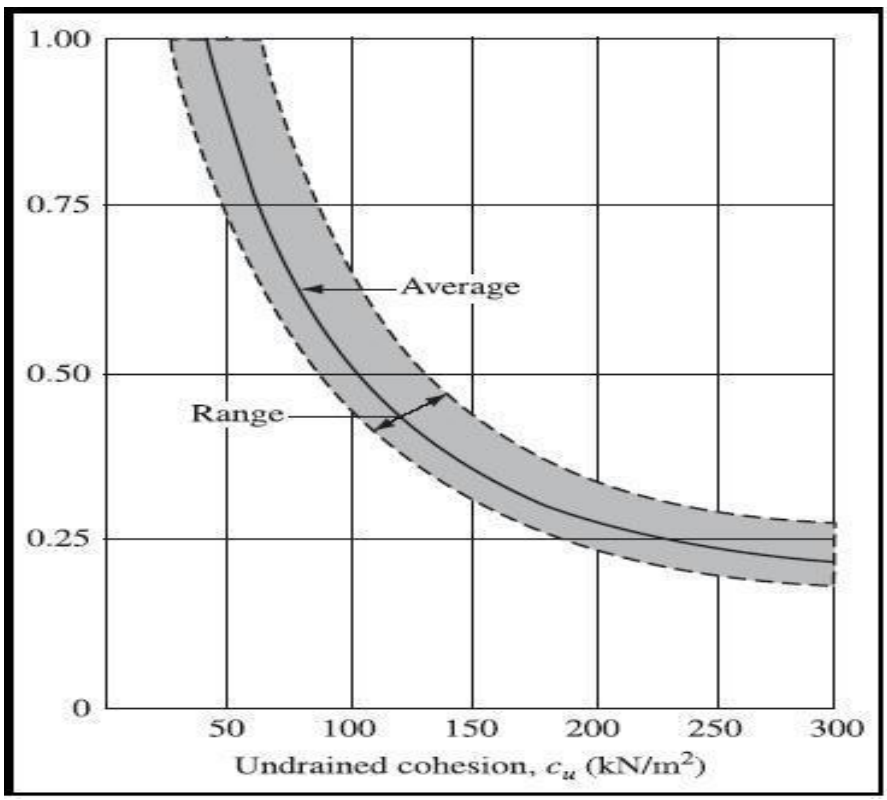

Variation of alpha with cohesion

ci = Average cohesion for the ith layer, in kN/m2

Asi = Surface area of pile shaft in the ith layer, in m2

A minimum factor of safety of 2.5 is used to arrive at the safe pile load capacity (Qsafe) from ultimate load capacity (Qu).

Qsafe = Qu/2.5

Load Carrying Capacity Of Cast In-Situ Piles In Cohesion Less Soil

The ultimate load carrying capacity of pile, “Qu”, consists of two parts. One part is due to friction, called *skin friction* or *shaft friction* or *side shear* denoted as “Qs” and the other is due to *end bearing* at the base or tip of the pile toe, “Qb”.

The equation given below is used to calculate the ultimate load carrying capacity of pile.

$$_u = A_p\left(\frac{1}{2}D\gamma N_\gamma + P_D N_q\right) + \sum_{i=1}^{n} k_i P_{Di} tan\delta A$$

Where,

Ap = cross-sectional area of pile base, m2

D = diameter of pile shaft, m

γ = effective unit weight of the soil at pile tip, kN/m3

Nγ= bearing capacity factor

Nq = bearing capacity factor

Φ = Angle of internal friction at pile tip

PD = Effective overburden pressure at pile tip, in kN/m2

Ki = Coefficient of earth pressure applicable for the ith layer

PDi = Effective overburden pressure for the ith layer, in kN/m2

δi = Angle of wall friction between pile and soil for the ith layer

Asi = Surface area of pile shaft in the ith layer, in m2

The first term is the expression for the end bearing capacity of pile (**Qb**) and the second term is the expression for the skin friction capacity of pile (**Qs**).

A minimum factor of safety of 2.5 is used to arrive at the safe pile capacity (Qsafe) from ultimate load capacity (Qu).

Qsafe = Qu / 2.5

Important Notes To Remember

The value of bearing capacity factor Nq is obtained from the figure given below.

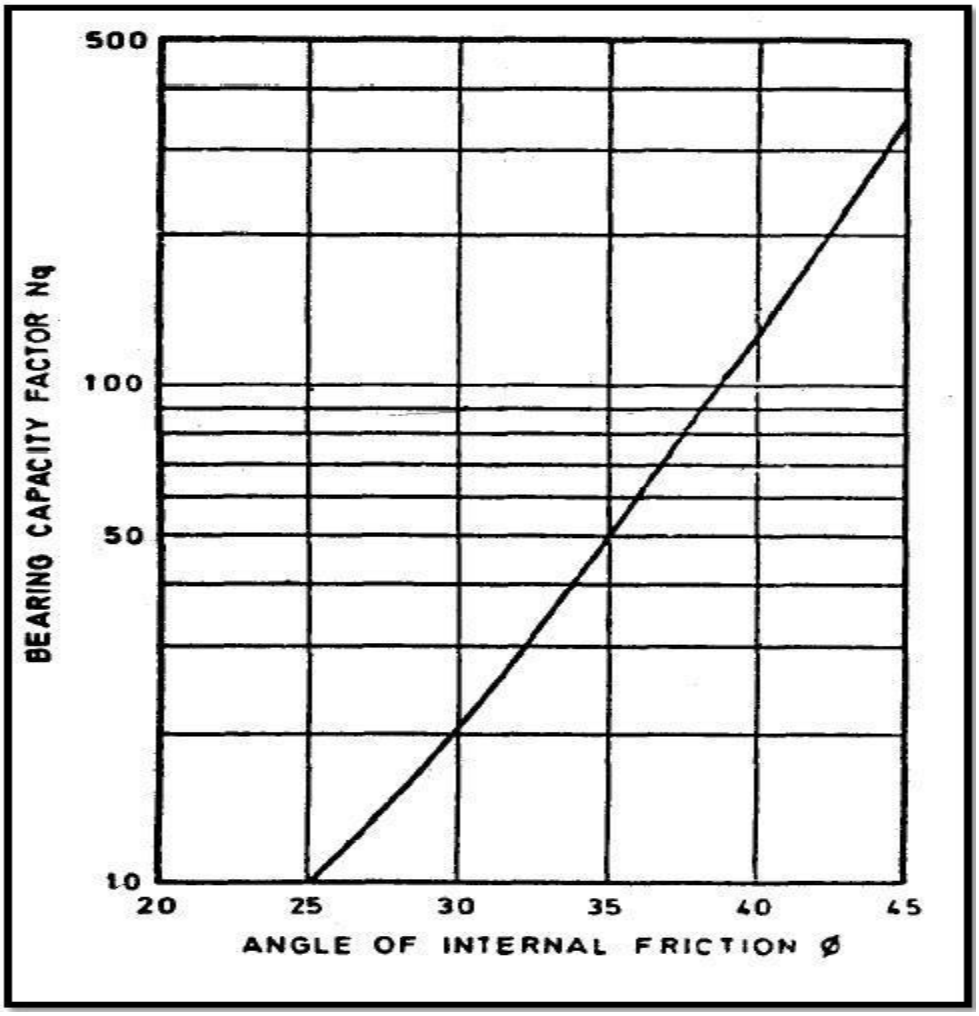

bearing factor value

- The value of bearing capacity factor Nγ is computed using the equation given below.

- For driven piles in loose to dense sand with ϕ varying between 300to 400 , ki values in the range of 1 to 1.5 may be used.
- δ, the angle of wall friction may be taken equal to the friction angle of the soil around the pile stem.
- The maximum effective overburden at the pile base should correspond to the critical depth, which may be taken as 15 times the diameter of the pile shaft for ϕ ≤ 300and increasing to 20 times for ϕ ≥ 400
- For piles passing through cohesive strata and terminating in a granular stratum, a penetration of at least twice the diameter of the pile shaft should be given into the granular stratum.

Dynamic formulae:

Dynamic formulae are used for driven piles. Static formulae are used **both** for bored and driven piles. Load testing is the most reliable method to determine the load capacity of the pile in the field.

They should be performed on all piling projects. However, they are considerably more expensive than the other methods used to determine pile capacity, and economic considerations sometimes preclude their use on projects.

Field tests like SPT, CPT are also used to correlate to load carrying capacity particularly for cohesion less soils.

Dynamic Pile Formulas:

Piles are usually forced into the ground by a pile driver or pile hammer. In medieval times piles were driven by men manually swinging hammer, which consists of a weight raised by ropes or cables and allowed to drop freely striking the top of the pile. After the drop hammer came the single acting hammer, double acting hammer, differential acting hammer, diesel pile hammer, and vibratory driver. Dynamic pile formulas are widely used to determine the static capacity of the driven pile. These formulas are derived starting with the relation.

Energy Input = Energy Used + Energy Lost

The Energy used equals the driving resistance (Pu) x the pile movement (s). Energy lost is due to friction, heat, hammer rebound, vibration and elastic compression of the pile, the pacing assembly, and the soil.

Energy News Record (ENR) Formula:

This formula takes into account the energy lost due to temporary compression (C) resulting from elastic compression of the piles. Thus,

Energy Input = Energy Used + Energy Lost

$Wr \times h = Pu \times s + Pu \times C$

$Pu = Wr\ h / (s + C)$

Where Wr = weight of the ram, h = height of fall of the ram, s = penetration of pile per hammer blow, Pu = average resistance of soil to penetration.

C = 25mm (1 inch) for drop hammer, and

C = 2.5 mm (0.1 inch) for steam hammer (single acting/double acting)

Pa = Pu/SF Where Pa = allowable load on pile and SF = Factor of safety = 6

For single/double acting hammer, the term (Wr x h) can be replaced by ηhE where ηh = hammer efficiency (see accompanying table) and E = rated energy of hammer.

Pile Load Test

Purpose of Pile Load Test

The purpose of pile load test is:

- To determine settlement under working load
- To determine ultimate bearing capacity
- To ascertain as a proof of acceptability

Types of Test

In general two types of pile load tests are conducted. They are:

- Initial Test
- Routine Test

The initial test is performed before the start of construction to assess the design adequacy. The routine test is performed on a working pile. This test is also known as work test. In initial test, the test load 5/2 times the working load in work test load is 3/2 times the design load.

Methods of Testing

There are two methods of testing piles. They include:

- Maintained Test
- Constant Rate of Penetration Test (CRP)

Maintained Load Test – The maintained load test is a better method. This method provides an idea of both shaft and end resistance. In this method the contribution of each soil layer can be calculated but it is time consuming. The failure load is not clearly defined.

Loading – Depending upon the workload, the load is applied by any one of the following methods.

- Directly through a kentledge for smaller loads
- By taking reaction against a kentledge for loads upto 5000 kN
- By jacking against a beam or truss connecting adjacent anchor piles or loads higher than 5000 kN

The typical loading of the piles are shown in Fig.1 below.

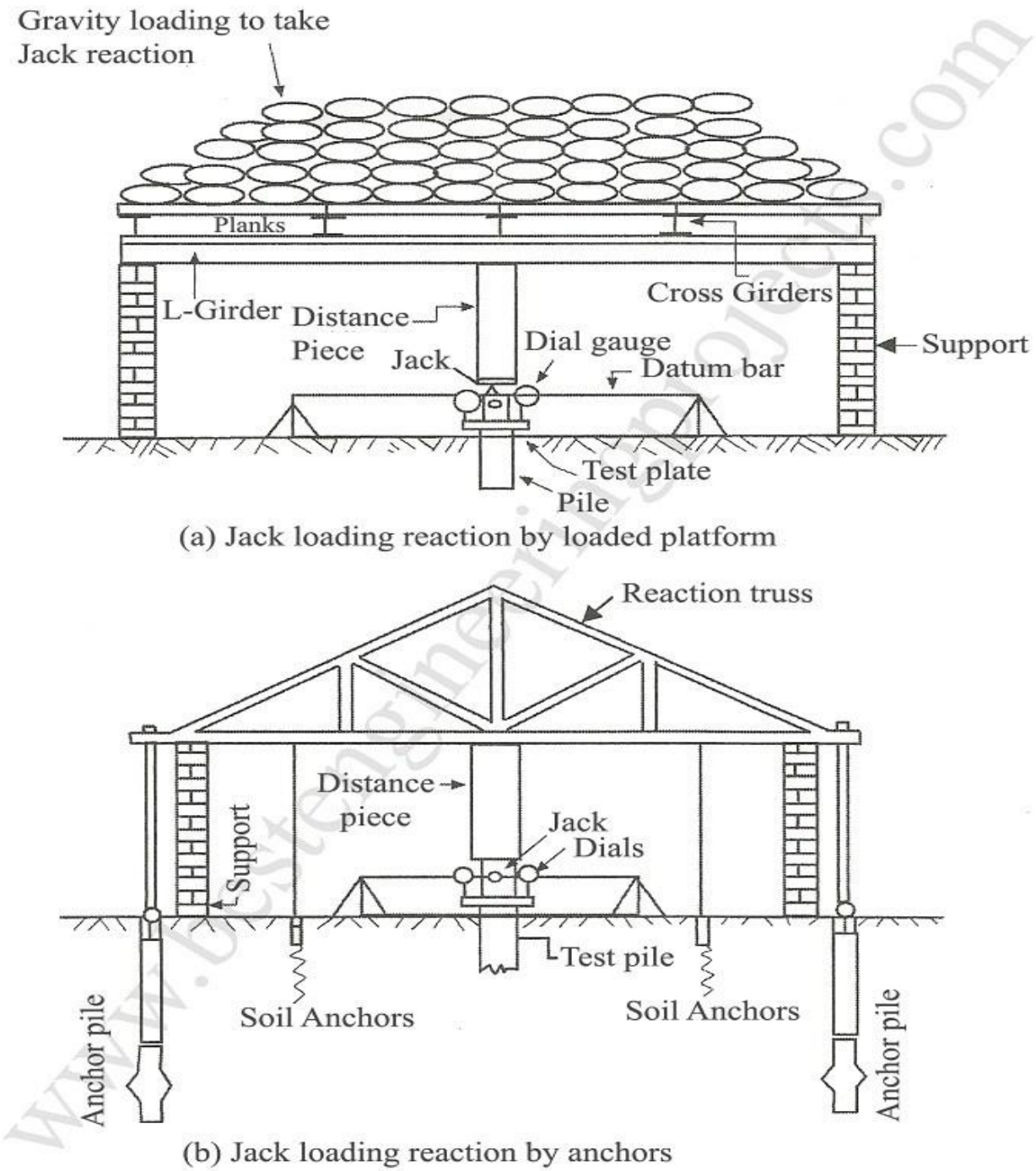

Fig 1 Loading Arrangements

Distance of anchor piles from test pile – The distance cannot be less than 1.5 m. It should not be less than 4 times the diameter of test pile for straight pile and not less than 2 times the diameter of the bell for belled pile.

Load Application – The load is applied in the pile in the following sequence.

- Load applied in increment at the rate of 25 % of working load till working load is reached
- For each load increment maintain the load constant till settlement is 0.1 mm for 5 min as per IS Code, 0.1 mm for 20 min as per BS Code
- Go for next loading
- When working load is reached hold the load for 24 hr and unload
- Reload from working load to higher loads
- Hold load constant till settlement is 0.1 mm for 5 min as per IS Code, 0.1 mm for 20 min as per BS Code
- Repeat the process for subsequent load increments
- Go either up to 5/2 times the working load for initial or routine test or to a settlement equal to 10 % of pile diameter for straight piles and 7.5 % of base diameter for belled pile

Fig.2 shows the time settlement and load settlement curves.

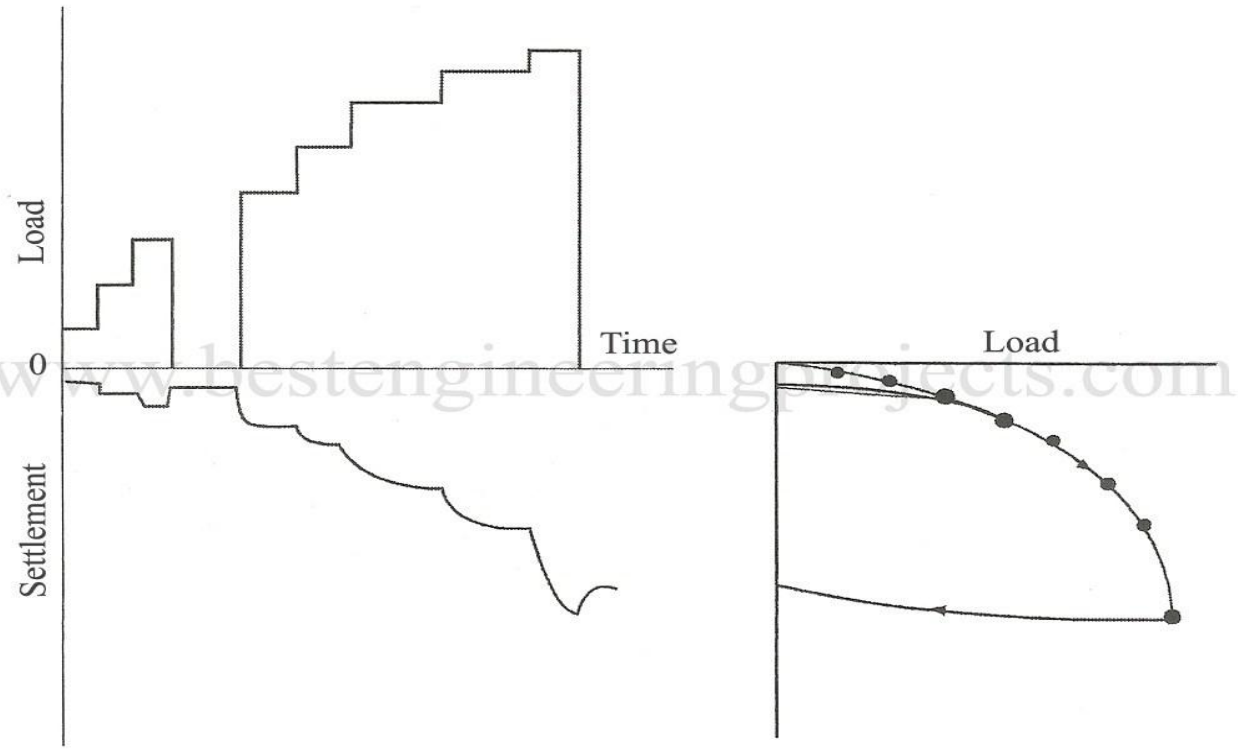

Fig 2 Load and Time Settlement Curves

A load settlement curve for point bearing pile is shown in Fig.3.

Load Measurement – The load is measured by any one of the following equipment

- Burdon Gauge
- Proving Ring
- Load Cell

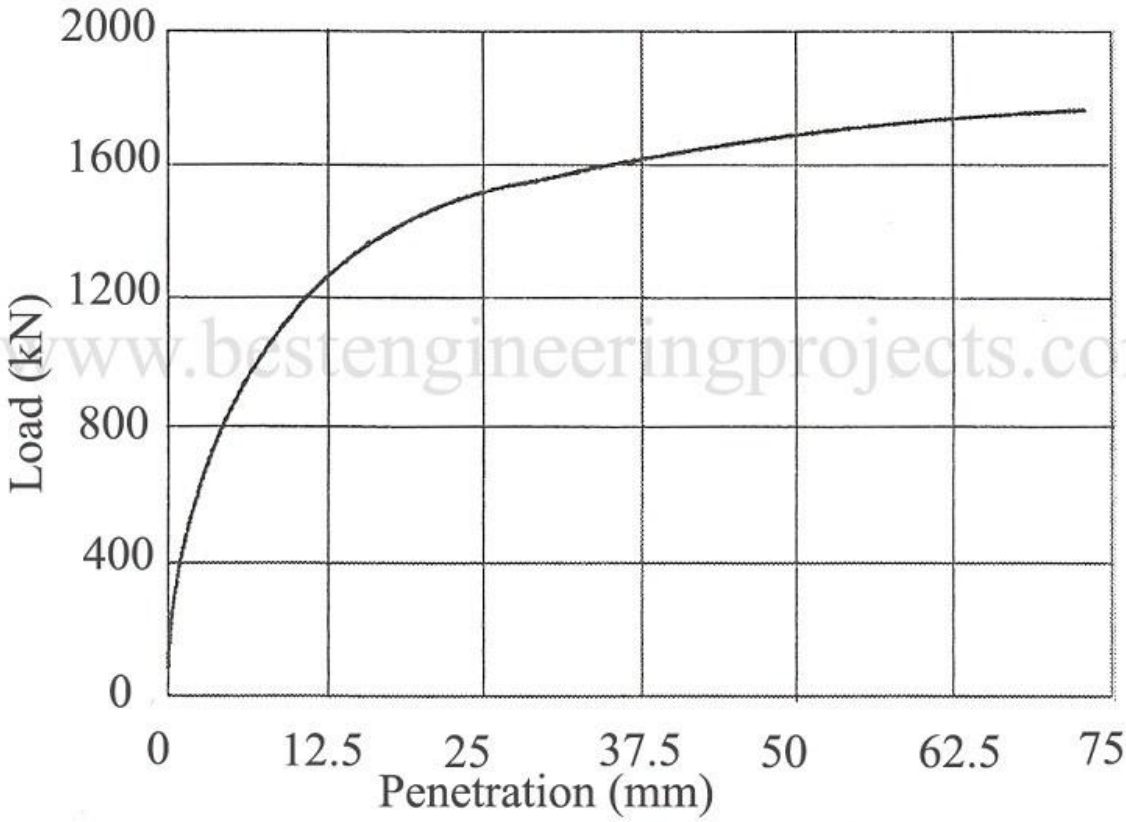

Fig 3 Load Settlement Curve for Point Bearing Piles

Settlement Measurement – The settlement is measured either by a dial gauge or by a leveling instrument.

Ultimate Load – The failure load is taken as either of the followings.

- 2/3rd of final load casing 12 mm settlement
- ½ load causing a total settlement of 10 % of pile diameter for straight piles or 7.5 % of base diameter for a belled pile.

Constant Rate of Penetration Test – This test is most suitable for friction pile. In this test, the well defined failure load is obtained and the method is very quick. However, this method does not provide elastic settlement at working load.

Method of Testing – In this method, the pile is jacked continuously into soil at a constant rate till failure takes place. The jacking rate in clay is 0.75 mm/min and a small movement required for failure. In sands, the jacking rate is 5 mm/min and a large movement required for failure.

Failure – The failure is defined as follows.

- Load at which pile continues to move downwards without any further loading or
- Load at which settlement is 10 % of pile diameter

The typical load settlement curves are shown in fig.4 below.

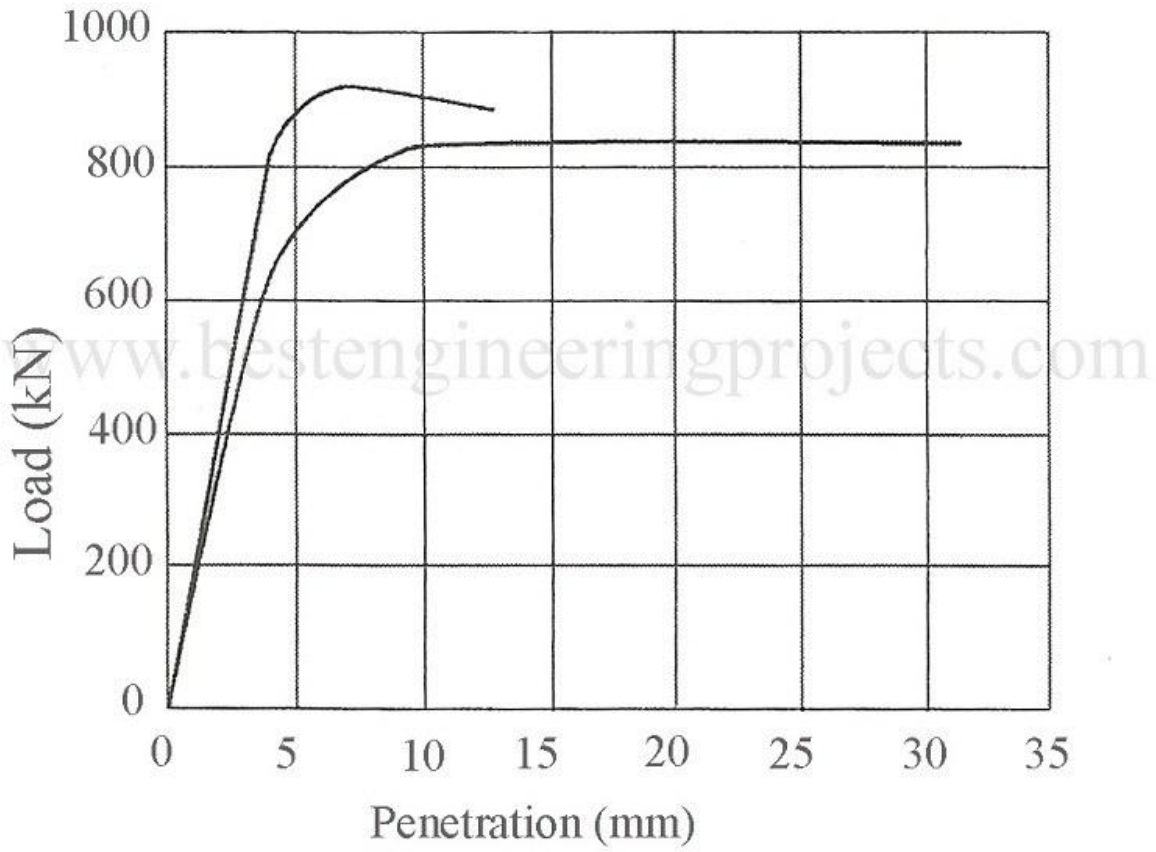

Fig 4 Typical Load Setttlement Curve for Friction Piles

Capacity of pile group is the sum of the individual capacities of piles, but it is influenced by the spacing between the piles.

Piles are driven generally in groups in regular pattern to support the structural loads. The structural load is applied to the pile cap that distributes the load to individual piles. If piles are spaced sufficient distance apart, then the capacity of pile group is the sum of the individual capacities of piles. However, if the spacing between piles is too close, the zones of stress around the pile will overlap and the ultimate load of the group is less than the sum of the individual pile capacities specially in the case of friction piles, where the efficiency of pile group is much less.

Group action of piles is evaluated by considering the piles to fail as a unit around the perimeter of the group. Both end bearing and friction piles are considered in evaluating the group capacity. End bearing

pile is evaluated by considering the area enclosed by the perimeter of piles as the area of footing located at a depth corresponding to the elevation of pile tips. The friction component of pile support is evaluated by considering the friction that can be mobilized around the perimeter of the pile group over the length of the piles as shown in figure below:

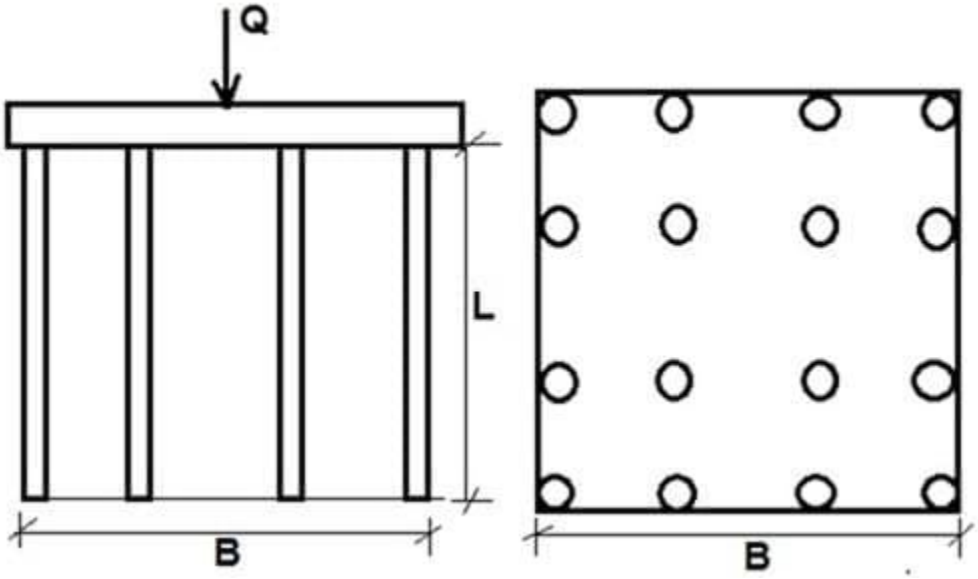

Pile group capacity, Q = q0 X B2 + 4 X B X L X f (Square)
Where, Q = ultimate capacity of pile group
q0 = ultimate bearing pressure of footing of area B2 (B = size of pile group)
L = Length of pile
f = shear resistance

Efficiency of Pile Group:

The efficiency of pile group depends on the following factors:
1. Spacing of piles
2. Total number of piles in a row and number of rows in a group, and
3. Characteristics of pile (material, diameter and length)

The reduction in total bearing value of group of piles is more in case of friction piles, particularly in clayey soils. No reduction in grouping occurs in end bearing piles. The pile groups which are resisting the load by combined action of friction and end bearing, only the load carrying capacity of friction is reduced. The efficiency η_g of the pile group can be calculated by using the following formula:

$$\eta_g = \frac{Q_{g(u)}}{NQ_u} \times 100$$

Thus, the pile group efficiency is equal to the ratio of the average load per pile in the group at which the failure occurs to the ultimate load of a comparable single pile.

Efficiency of a pile group can also be obtained by using Converse – Lebarre formula:

$$\eta_g = 1 - \frac{\theta}{90}\left(\frac{(n-1)m + (m-1)n}{m \times n}\right)$$

Where m = number of rows

n = number of piles in a row

$\theta = \tan^{-1}\frac{d}{s}$ in degrees

d = diameter of pile end

s = spacing of piles.

Generally center to center spacing between piles in a group is kept between 2.5 d and 3.5d where d is the diameter of the pile.

Pile foundation spacing and skin friction in a pile group decides the design of pile foundation, its efficiency and capacity in any construction.

The main purpose of a pile foundation is to let the transfer of load through weak soil strata (soil strata with poor bearing capacity).

The pile foundation is found to be an economical choice when soil strata at a reasonable depth is weak. The ending of the pile foundation must reach into strata that gain adequate bearing capacity.

Depending upon the condition, a cluster of piles can be inserted to improve the bearing capacity.

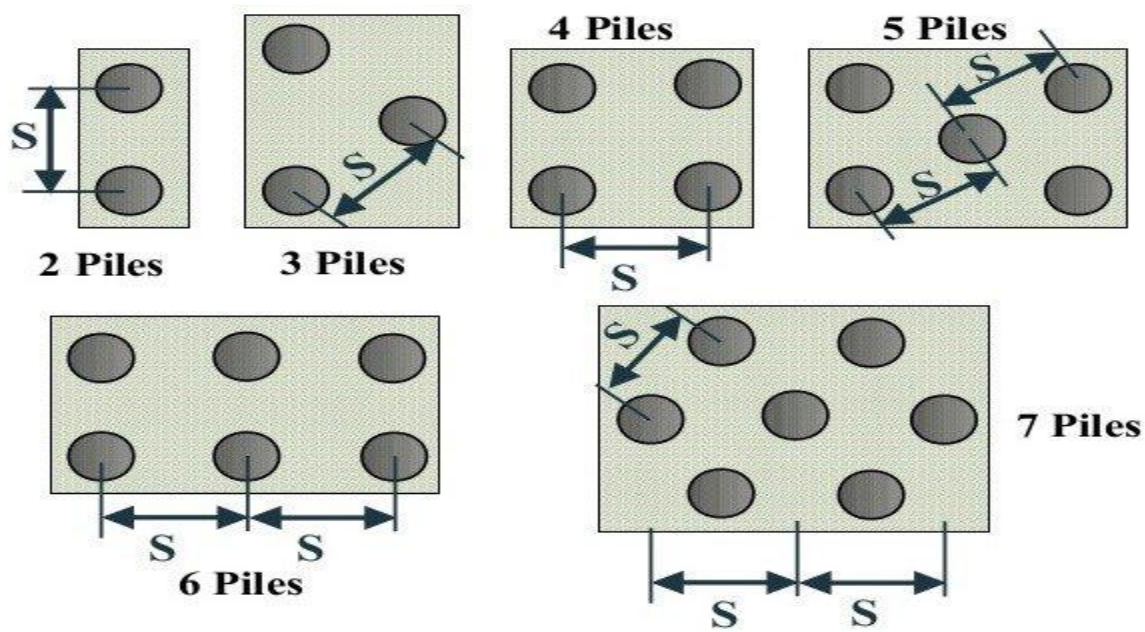

The piles are also employed in areas where the load must be transmitted by certain frictional resistance over the depth by means of skin friction with the surrounding soil. This offers adequate shear resistance. Pile foundation also helps in avoiding the construction of cofferdams for supporting piers in water. Here the pile will carry the load to an appreciable supporting medium below a considerable depth of the water.

The piles that are driven at an angle are called as raker piles. These are used to resist the inclined forces. The inclined forces are the effect of horizontal thrust.

Those piles that transfer the load to or through an underlying stratum by means of friction is called the friction pile. Here one of the embedded surfaces is the pile surface.

End bearing piles are piles that transfer the load to the lower stratum. Specially designed piles will transmit the load by both the means.

Suitability of Pile Foundation in Construction

The pile foundation is generally employed in the following type of soil strata:

1. Area with compact or hard stratum, underlying soil is soft material, sand or clay
2. The area with clayey soil with soft stratum overlying the firm layer. Here the open foundations lead to high settlement
3. Dense or stiff soil with soft clay overlaid. Here the open foundations can be spaced closely to reduce the pressure that is transmitted to the soft layer
4. Alternative layers of clay- soft layer and thick in nature
5. Sandy strata with high water table. This brings difficulty for excavation

Spacing of Pile Foundation in Pile Group Construction

The piles must be arranged in such a way that the force exerted by one of the piles on the other is least. In the case of friction piles, this factor is very important. This is because the soil surrounding the piles are in a stressed condition. This force exertion will affect the frictional resisting capacity of the neighboring piles.

The influence lines of a cluster of piles on the surrounding ground are shown in the figure-1. The lines show the stress intensities at a point. More the distance from the pile edge surface, lesser is the stress intensities. So, this provides an idea on the minimum spacing that must be provided between the two piles.

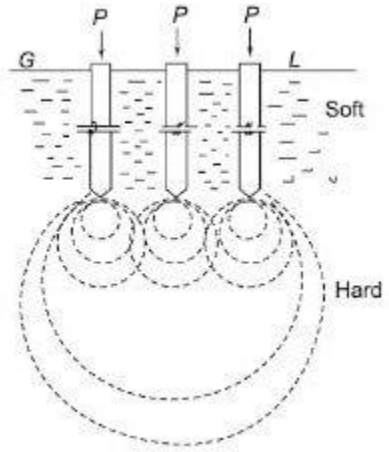

Fig.1: Pressure Distribution represented by Influence lines in the case of End Bearing Piles

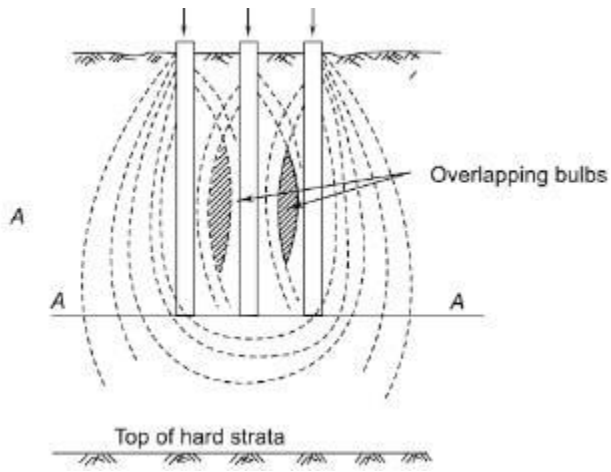

Fig.2: Pressure Distribution represented by Influence lines in the case of Friction Piles

For the convenience of driving and to provide adjustments for any error during the placement or the problems due to the coming out of the pile from the plumb causing the piles to come closer, provision of minimum spacing is employed in the case of point bearing piles. The Indian code IS 2911 have given a proper explanation on this note.

In the case of friction piles, the spacing must be such a way that the zone of the influence lines on the surrounding soil must not overlap each other. This will hence reduce the bearing values and reduce the settlement. It is hence mentioned that the minimum spacing should not be less than the diagonal dimension or the diameter of the pile.

The end bearing piles that are used in compressible soils must be spaced at a minimum of 2.5d and a spacing of 3.5d(Maximum)for those piles placed on less compressible or stiff clay soil.

The Indian Road Congress specifies a minimum spacing of 3d or a distance equal to pile perimeter for the friction piles. In the case of end bearing piles, the space between the piles that are placed adjacent must not be less than least width of the pile.

The spacing of piles as per the practice followed in the UK are based on the following formulae:

End bearing piles: Spacing $S = 2.5d + 0.02L$

Cohesion Piles: Spacing $S = 3.5d + 0.02L$

Here d is the diameter of the pile and L is its length. The standard also stipulates for pile capacity till 300 kN, the distance from the edge of the pile to the pile stem must be 100mm. For higher capacities, the mentioned distance must be 150mm.

Maximum Pile Foundation Spacing

The Maximum pile spacing should be decided by considering two factors:

The design of pile cap

Overturning Moments

The pile cap will be heavier with increase in the spacing between the piles. So, while choosing the spacing of the piles, pile cap design should also be evaluated.

The stability of the whole pile cluster against the action of the overturning moment must be evaluated along with the spacing of the piles.

Soil Friction Factors for Pile Foundation

The skin friction factors help in the preliminary estimation of the pile capacity. The value of the soil friction factor varies from driven to bored piles. This factor can be used only for preliminary calculations. Before a final decision is taken, a full-scale load test must be carried out. The table-1 shows the approximate skin friction factors in saturated clay. Here Ro is the consolidation ratio.

Table.1: Skin Friction Factors of Saturated Clay

Pile Length in meters	Clay Driven Piles Normally Consolidated	Over Consolidated Clay- Driven Pile	Over Consolidated Clay- Bored Pile
20	0.3	$0.3\sqrt{Ro}$	$0.15\sqrt{Ro}$
40	0.2	$0.2\sqrt{Ro}$	$0.1\sqrt{Ro}$
60	0.15	$0.15\sqrt{Ro}$	$0.08\sqrt{Ro}$

Well Foundations

Well foundation is a type of deep foundation which is generally provided below the water level for bridges. Cassions or well have been in use for foundations of bridges and other structures since Roman and Mughal periods

The term 'cassion' is derived from the French word caisse which means box or chest. Hence cassion means a box like structure, round or rectangular, which is sunk from the surface of either land or water to some desired depth.

The cassions are of three types:

(i) Box caisson:

It is open at the top and closed at the bottom and is made of timber, reinforced concrete or steel. This type of cassion is used where bearing stratum is available at shallow depth.

(ii) Open cassion (wells):

Open cassion is a box opened both at top and bottom. It is made up to either timber, concrete or steel. The open cassion is called well. Well foundation is the most common type of deep foundation used for bridges in India.

(iii) Pneumatic cassions has its lower end designed as a working chamber in which compressed air is forced to prevent the entry of water and thus excavation can be done in dry conditions.

Shapes of Wells:

The common types of well shapes are:
(i) Single circular
(ii) Twin circular
(iii) Dumb well
(iv) Double-D
(v) Twin hexagonal
(vi) Twin octagonal
(vii) Rectangular.

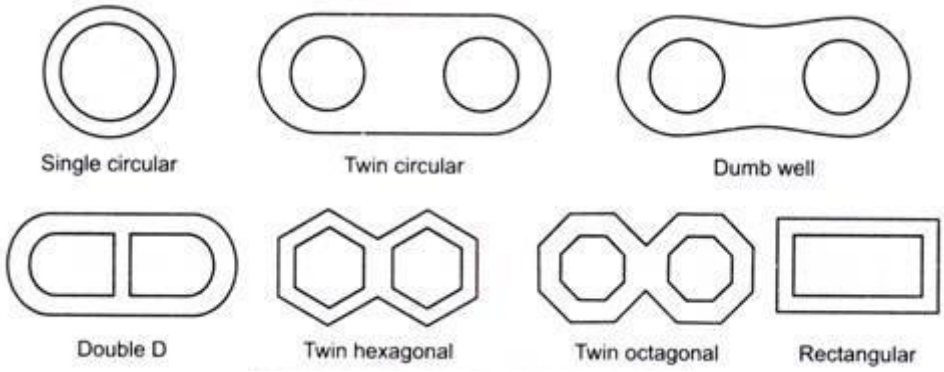

The choice of a particular shape of well depends upon the size of the pier, the care and cost of sinking, the considerations of tilt and shift during sinking and the vertical and horizontal forces to which well is subjected.

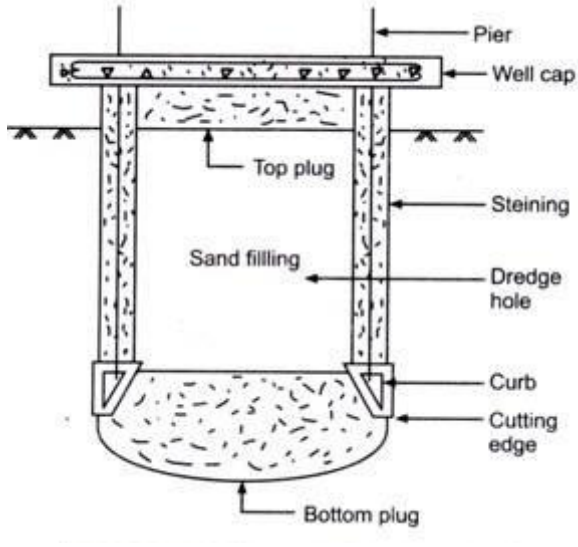

A circular well has the minimum perimeter of a given dredge area. Since the perimeter is equidistant at the points from the centre of dredge hole, the sinking is more uniform than the other shapes. However, the circular well is that in the direction parallel to the span of bridge, the diameter of the well is much

more than required to accommodate minimum size of pier and hence circular well obstruct water way much in comparison to other shapes.

Forces Acting On a Well Foundation:

In addition to the self weight and buoyancy, it carries the dead load of superstructure, bearing and piers and subjected to the following horizontal forces:

(i) Braking effort of the moving vehicle.
(ii) Force due to the resistance of bearings against movement due to temperature variations.
(iii) Force of water current
(iv) Seismic forces
(v) Wind force
(vi) Earth pressure.

Description of Parts (Elements) of Well:

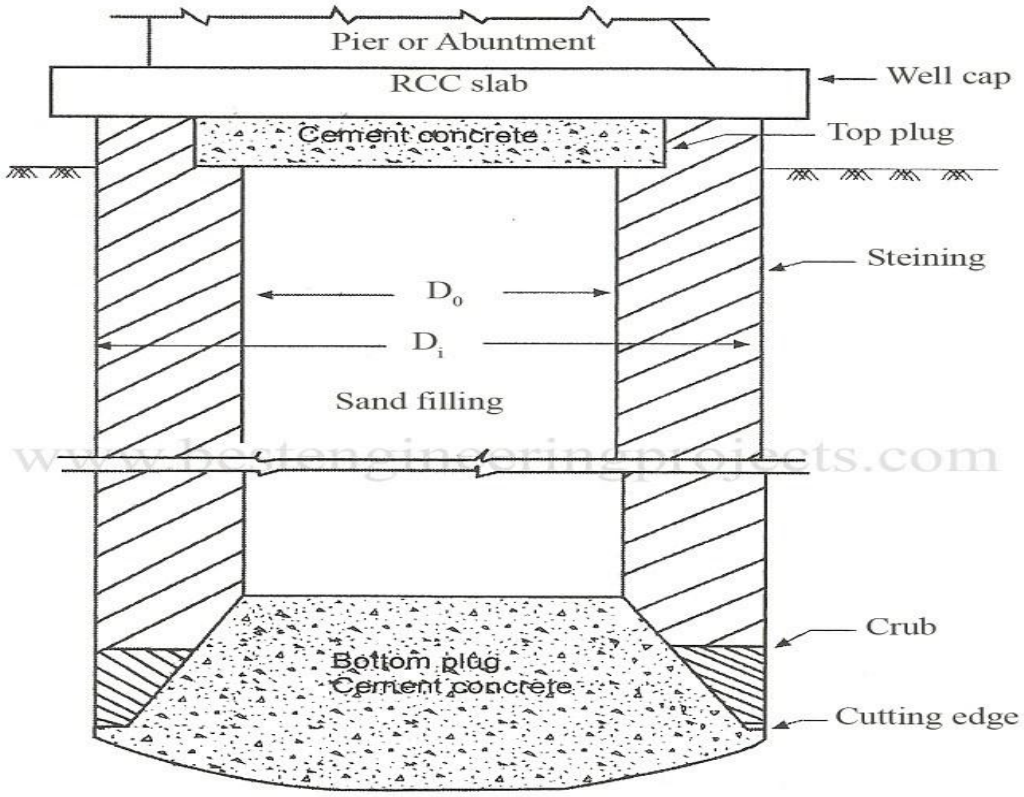

Fig 1 Parts of a Well Foundation

1. Staining:

It is the wall or shall of the well, made of R.C.C. and which transfer the load to the curb. It acts as a enclosure for excavating the soil for the penetration of well.

It is the wall of well & is built over a wedge shaped portion called well curb. The steining is designed such that it can be sunk under it own weight. The thickness should be sufficient so as to overcome skin friction developed during sinking by its own weight. The minimum reinforcement in the well staining

should be 5 to 6 kg/m3 of which 75 % is to be provided as vertical and 25 % as lateral ties or hoop rings. The minimum thickness is 0.45 m or 1/ 8 of the external dia. of well for brick masonry and 1/10 for wells with cement concrete. The thickness is increased by 12 cm per each 3 m depth after sinking the 3 m of steining for brick well and 15 cm for each 6 m depth after sinking the first 6 m of cement concrete well. The thickness can be computed as:

t = D/2[1 – √(1-4qs/ï D)]

Where D is the diameter of well, qs is the unit skin friction, ï is the unit weight of concrete or Brick masonry. The thickness of the steining is a function of the size of the well. The recommended thickness is:

D(m)	3	5	7
t(m)	0.75	1.20	2.00

The thickness of the steining is also given by,
t = k[(B/8) Ã— (H/100)]
Where k = 1 for sand, 1.1 for soft clay and 1.25 for hard clay and boulder.
The skin friction, which is developed during sinking a well/caisson, is difficult to estimate by soil tests. The load at which a well gets stucked during sinking is taken as the skin friction. Experience has suggested that the skin friction is fairly constant below a depth of 7.5 m. The following table gives the values that have been obtained for wells ranging in depth from 7.5 m to 37.5 m.

Soil Type	Skin Friction (kN/m2)
Silt and Soft Clay	7.3 – 29.3
Very Stiff Clay	49 – 195
Loose Sand	122 – 242
Dense Sand	342 – 648
Dense Gravel	490 – 940

2. Curb:
It is a R.C.C. ring beam with steel cutting edge below. The cross- section of the curb is wedge shaped which facilitates the sinking of the well. The curb supports well stening. The curb is kept slightly projected from the stoning to reduce the skin friction.

3. Cutting edge:
It is the lowest part of the well curb which cuts the soil during sinking.

4. Bottom plug:

After completion of well sinking the bottom of well is pluged with concrete. The bottom plug which is confined by the well curb acts as a raft against soil pressure from below.

The bottom plug is made bowled shape in order to have an arch action. The bottom plug transmits load to soil below. When sunk to its final depth bottom part is concreted to seal the bottom completely. The thickness varies from ½ to full inside diameter of the well so as to be able to resist uplift forces. The concreting should be done in one continuous operation. When wells contain more than one dredge hole all should be plugged to the same height. If the well is to rest on rock, it should be anchored properly by taking it 25 cm to 30 cm deep into rock The bottom plug should be of rich concrete (1:2:4) with extra 10 % of cement. The thickness of the bottom plug is given by:

t2 = 1.18R(q/fc), for circular well

and t2 = [3qb2/{4fc(1 + 1.61Î±)}], for rectangular well

Where q is the bearing pressure at base of well, R is the radius of the arc b is the width of well, fc is the flexural strength of concrete seal and, Î± = Width/Length.

5. Back fill:

The well is dewatered after setting of the bottom plug and it is backfilled by sand or excavated material.

6. Top plug:

It is a concrete plug provided over the filling inside the well.

7. Well cap:

It is a R.C.C. slab provided at the top of stening to transmit the load of superstructure to the stening and over which pier is laid. The minimum thickness of the slab is about 750 mm.

Sinking of the Well

The sinking of a well foundation is carried out through the following steps.

Laying of Curbs – In dry ground excavate up to 50 cm in river bed and place the cutting edge at the required position. If the curb is to be laid under water and depth of water is greater than 5 m, prepare Sand Island and lay the curb. If depth of water exceeds 5 m built curb in dry ground and float it to the site. A typical sand island is shown in Fig.1 below.

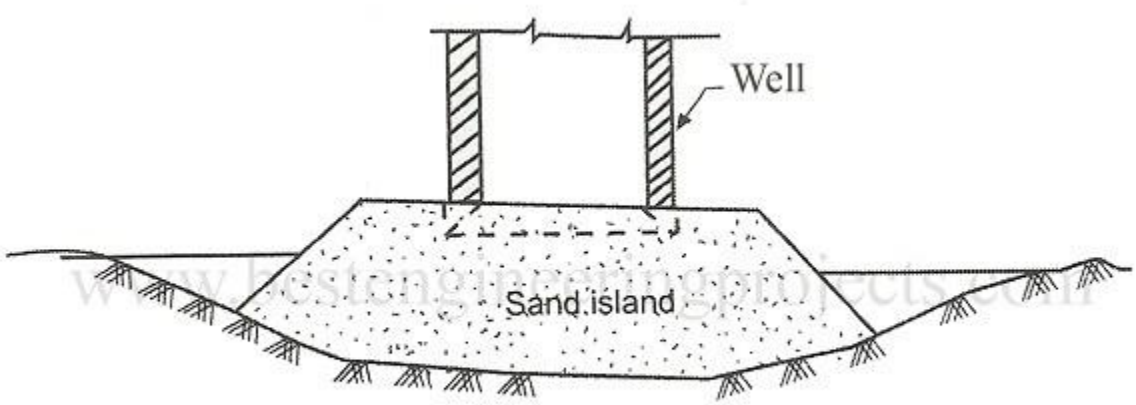

Fig 1 A Typical Sand Island

Construction of Well Steining – The steining should be built in short height of 1.5 m initially and 3 m after a 6 m grip length is achieved. The verticality should be maintained. The aim of the well sinking is to sink the well vertically and at the correct position. The following precautions are to be taken as far as possible.

Precautions – The following precautions should be taken during well sinking.

- Outer surface should be regular and smooth.
- Radius of the curb should be 2 to 4 cm larger than the radius of the steining.
- Cutting edge should be of uniform thickness and sharpness.
- Dredging should be done uniformly on all sides.

Sinking Operation – The following operation is carried out while sinking the caisson.

- Excavate material under the inside of well curb mechanically or manually
- Allow the well to remain vertical.
- Up to a depth of 1 m, excavation underwater can be made manually. When the depth of water exceeds 1 m excavate by Jhams or grabs.
- When well goes on sinking skin friction increases and weight of well decreased due to buoyancy.
- When the well does not sink, sunk by applying kentledge. If this operation is not sufficient jet outside the well or grease the outside. A typical loading on steining by kentledge is shown in Fig 2.
- Go on adding sections of steining (2 to 5 m in length) up to the required founding strata.

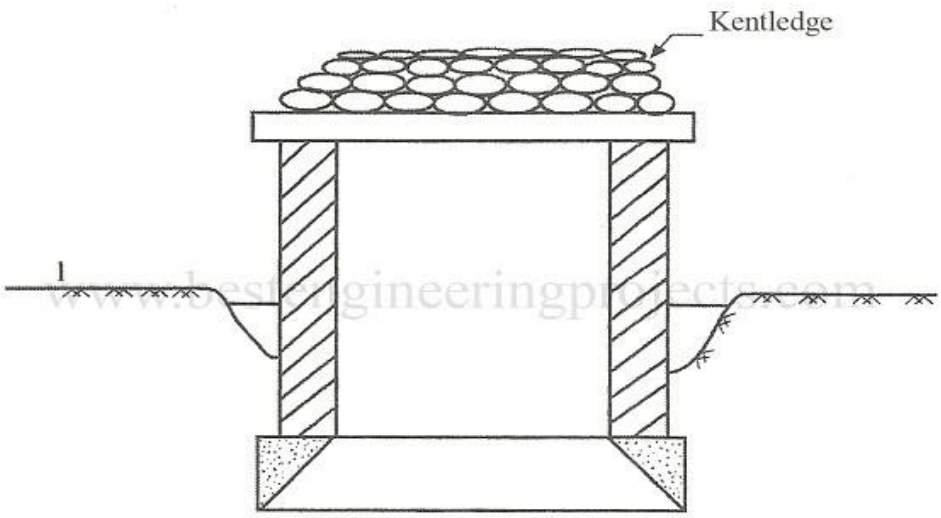

Fig 2 Loading Steining by Kentledge

Problem of Sinking – Generally the following problems are encountered while sinking a well.

Tilt and Shift- Adopt the following measures if tilt exceeds 1/60. Dredge at the higher side. Not effective at greater depths. This is shown in Fig.3 and 4 below.

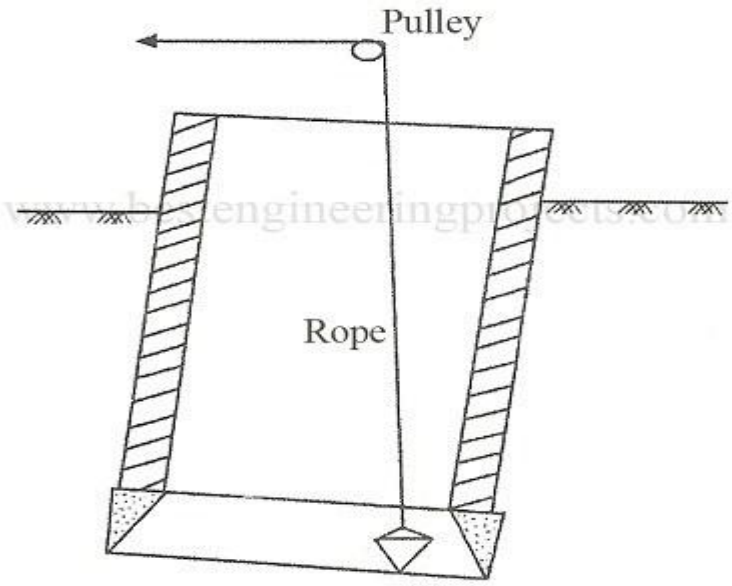

Fig 3 Dredging the Well

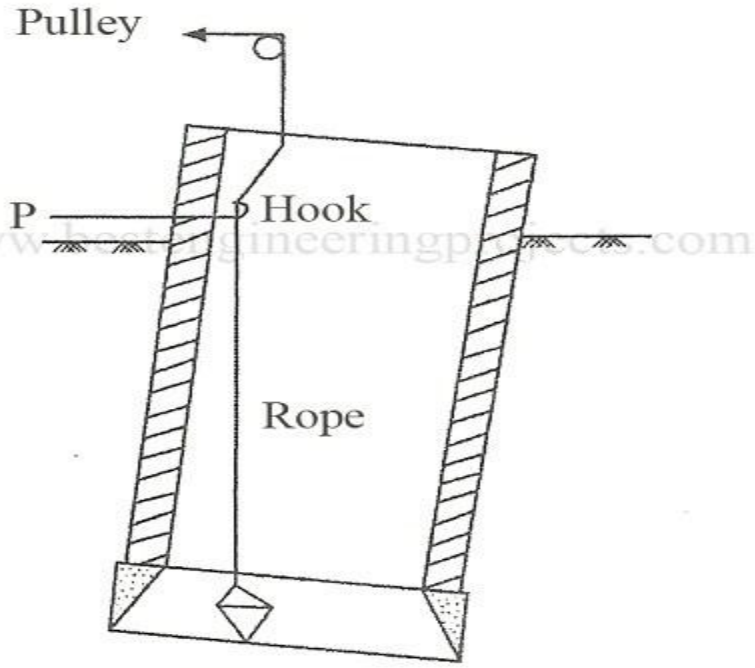

Fig 4 Dredging the well

Make a hole on steining on higher side, hole is made near the ground level and excavation is carried out by diving. If possible dewater and excavate on the higher side. This is shown in Fig.5 below.

Construct eccentric welded framed bracket and load the platform thus made with 400 to 600 tons load. This is shown in Fig.5 below.

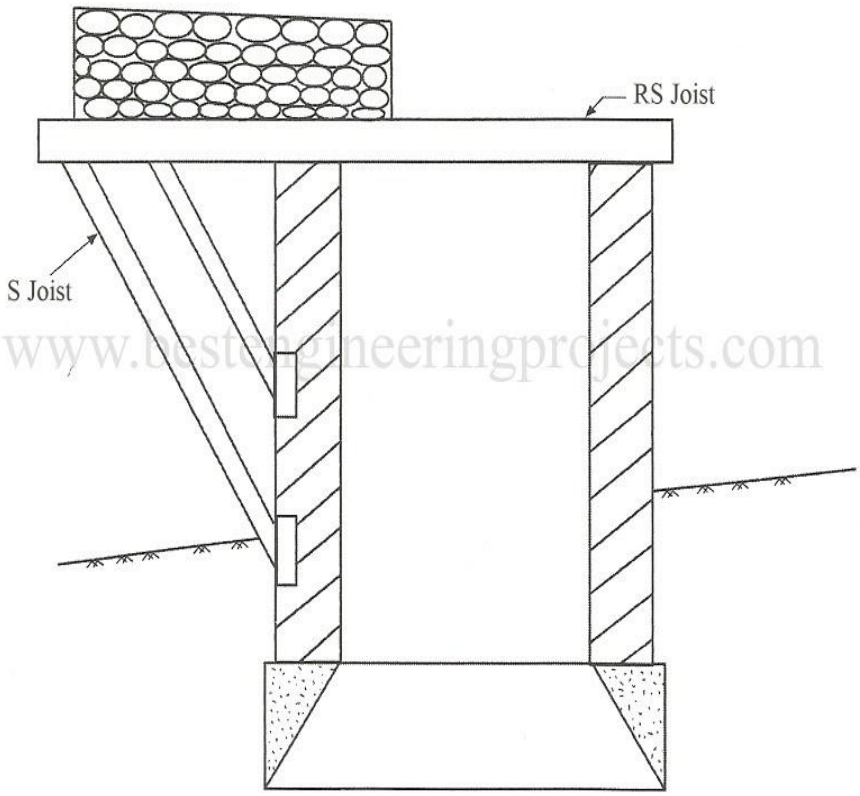

Fig 5 Eccentric Loading

Jett on the high side of well. Excavate under cutting edge by dewatering or by divers.
Insert wooden slippers or hooks under the cutting edge. This is shown in Figs.6 and 7 below.

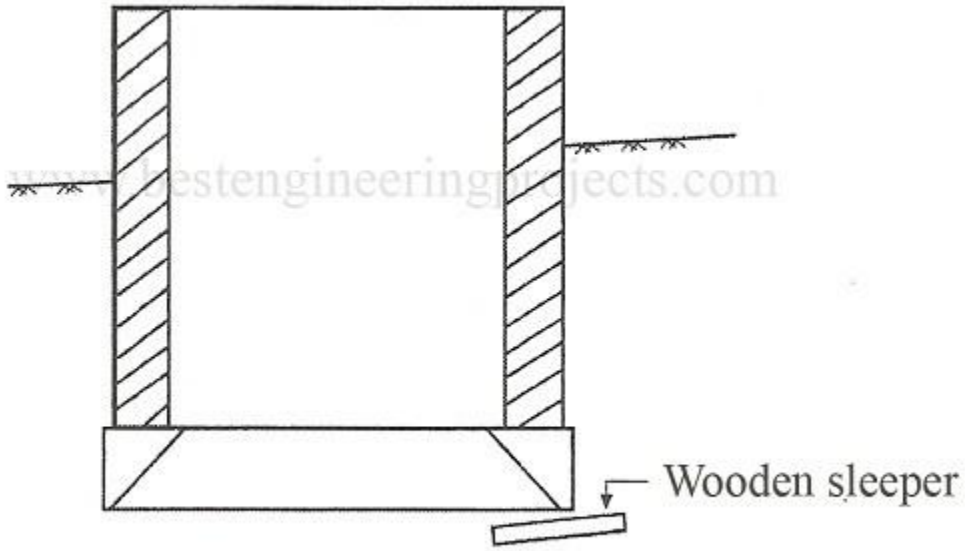

Fig 6 Provision of Wooden Slipper

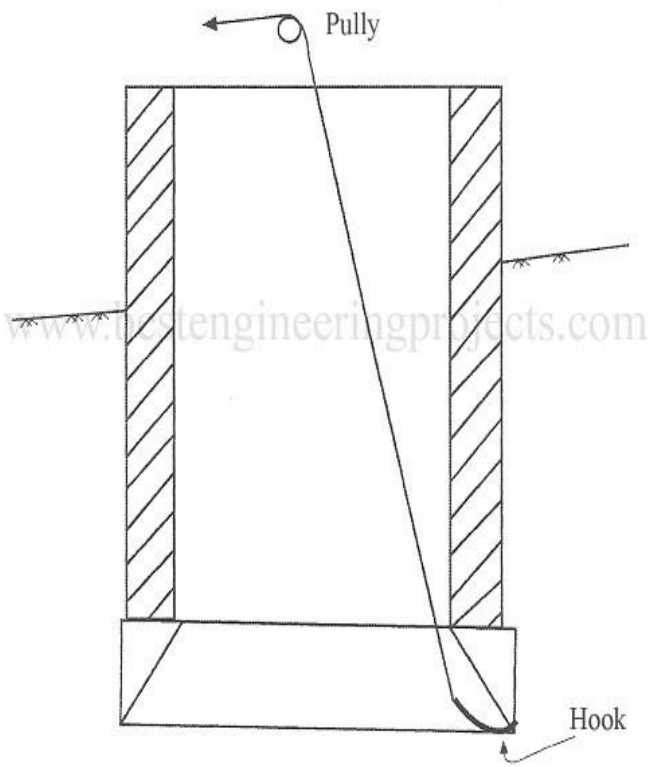

Fig 7 Hooking the Well

Pull the well. This is shown in fig.8 below.

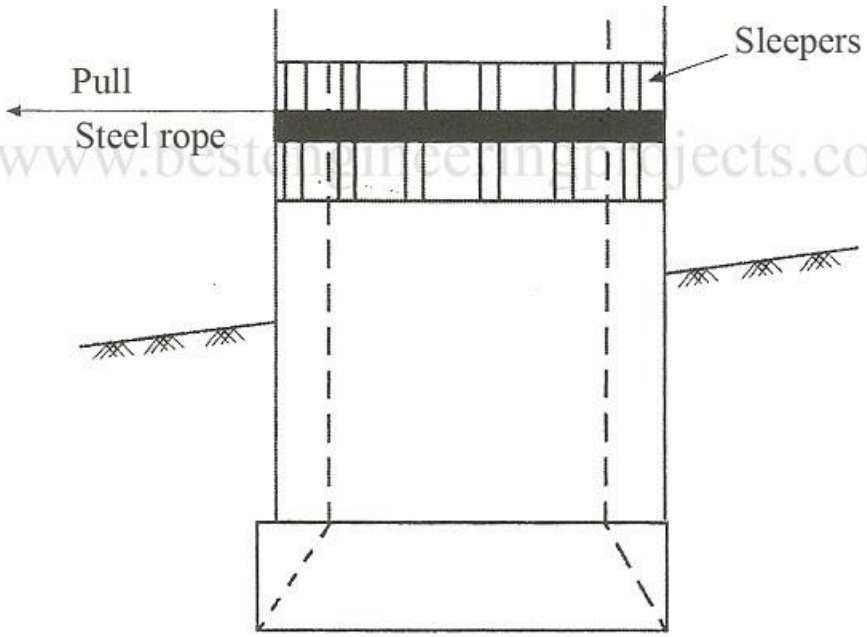

Fig 8 Pulling the Well

Strut the well. This is Shown in figure 9 below.

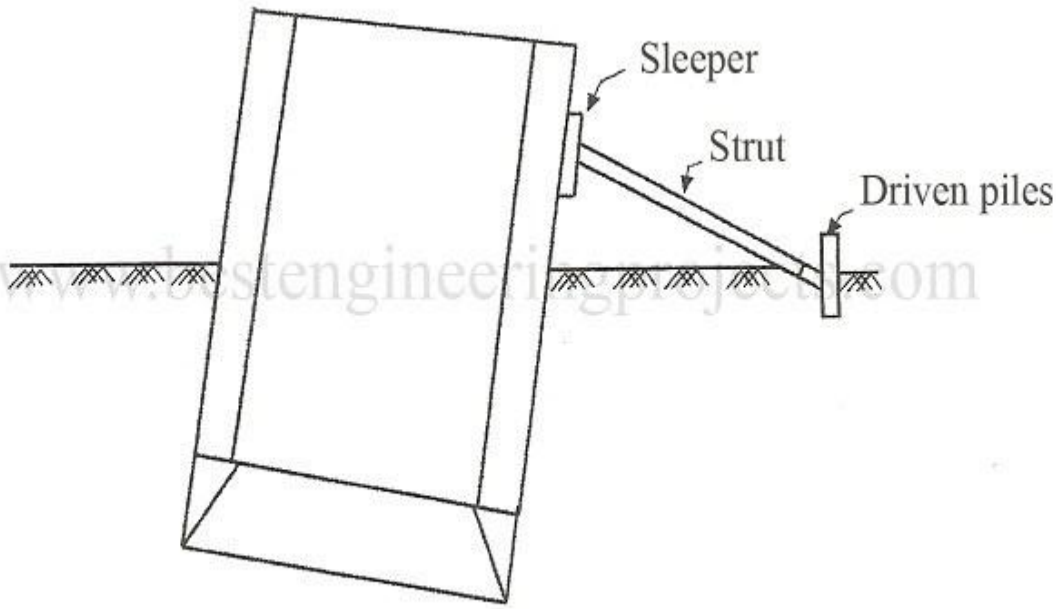

Fif 9 Strutting of the Well

Push the well. This is shown in figure 10 below.

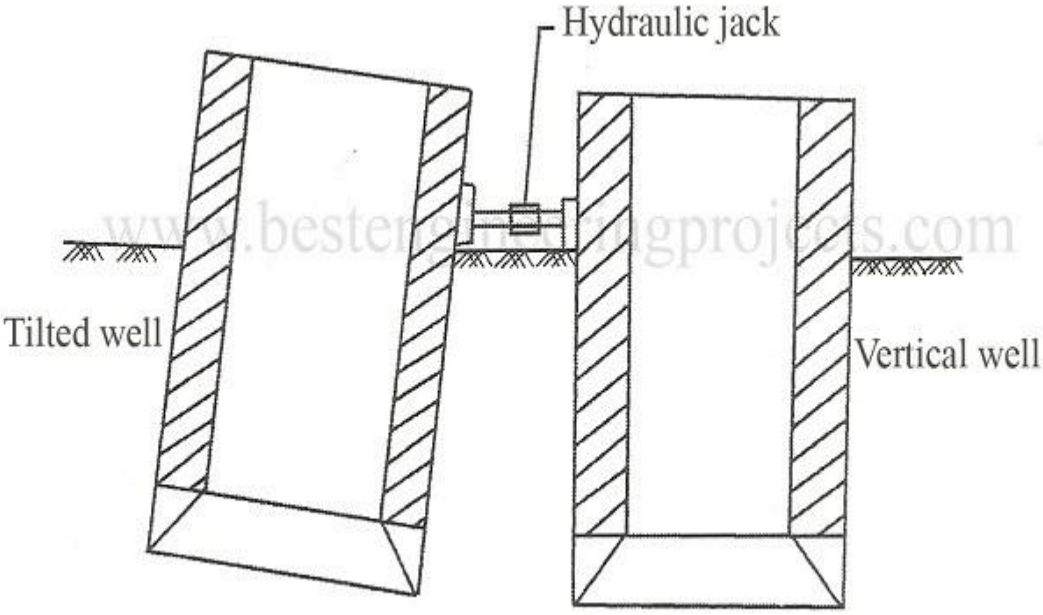

Fig 10 Pushing of the well