GROUND IMPROVEMENT TECHNIQUES

UNIT-1

Introduction

Need for Engineering ground Improvement

When a project encounters difficult foundation conditions, possible alternate solutions are:

- Avoid the particular site
- Design the planned structure accordingly.

Use a soft foundation supported by piles, design a very stiff structure which is not damaged by settlements

- Remove and replace unsuitable soils.
- Attempt to modify the existing ground

Classification of Ground modification Techniques:

4 Groups of Ground Improvement techniques

Mechanical Modification: Soil density is increased by the application of mechanical force, including compaction of surface layers by static vibratory such as compact roller and plate vibrators.

Hydraulic Modification:

- Free pore water is forced out of soil via drains or wells.
- Course grained soils; it is achieved by lowering the ground water level through pumping from boreholes, or trenches.
- In fine grained soils the long term application of external loads (preloading) or electrical forces (electrometic stabilization)

Physical and chemical modification:

Stabilization by physical mixing adhesives with surface layers or columns of soil .Adhesive includes natural soils industrial by-products or waste.

Materials or cementations or other chemicals which react with each other and/or the ground.

When adhesives are injected via boreholes under pressure into voids within the ground or between it and a structure the process is called grouting. Soil stabilization by heating and by freezing the ground is considered thermal methods of modifications

Modification by inclusions and confinement:

Reinforcement by fibers, strips bars meshes and fabrics imparts tensile strength to a constructed soil mass. In-situ reinforcement is achieved by nails and anchors. Stable earth retaining structure can also be formed by confining soil with concrete, Steel, or fabric elements.

Suitability, Feasibility and Desirability

The choice of a method of ground improvement for a particular object will depend on the following factors.

- Type and degree of improvement required
- Type of soil , geological structure, seepage conditions
- cost
- Availability of equipment and materials and the quality of work required
- Construction time available
- Possible damage to adjacent structures or pollution of ground water resources
- Durability of material involved (as related to the expected life of structure for a given environmental and stress conditions)
- Toxicity or corrosivity of any chemical additives.
- Reliability of method of analysis and design.
- Feasibility of construction control and performance measurements If soil is moist, freezing is applicable to all type of soil.

Dewatering

Dewatering involves controlling groundwater by pumping, to locally lower groundwater levels in the vicinity of the excavation.

The application of **sumps and ditches** within an excavation is one of the elementary method of dewatering employed in construction. The water entering these installed units can be pumped out.

The general procedure of dewatering with sumps and ditches is depicted in the figure-1.

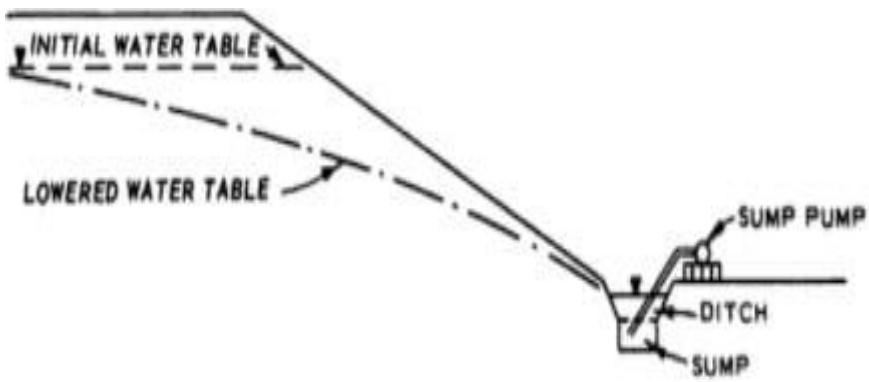

Fig.1. Dewatering Method by the Installation of Sumps and Ditches

The sump is located below the ground level of the excavation as shown in figure-1, at one or more corners or the sides. The procedure involves the cutting of a small ditch around the bottom of the excavation, that is falling towards the sump.

The sumps is the name given for the shallow pits that are dug along the periphery of the excavation or the drainage area, which is named as ditches. Under the action of gravity, the water from the slopes will flow to the sumps. The sumps collect the water and are later pumped out.

Significant amount of seepage can result in raveling or sloughing or softening of the slope in the lower part. The slump bottom may also be subjected to piping.

The above problems can be solved by the use of inverted filter that is of many layers. These have coarser material in successive layers from the bottom of the sump pit to the upward direction. This is a simple method used for dewatering shallow excavations that have coarse grained soils or the soils that have permeability that is greater than 10^{-3} cm/sec.

Suitability of Sumps and Ditches for Dewatering of Excavations

If the construction demands for lowering the water table or the ground water head of the area to a depth greater than 1 feet, the method of sumps and ditches is not suitable.

If sumps and ditches are employed for greater depth lowering, seepage will be prominent that will result in the instability of the excavation slopes. This wrong decision will also bring effects that are detrimental for the integrity of the foundation soils of the area.

In order to overcome the problems that arise due to minor raveling and to support the collection of seepage water, it is recommended to employ filter blankets or drains in the sump and ditch system installed.

Use of Sumps and Ditches in Cofferdams

In areas that are confined, the common method of excavation that is followed is the driving of a sheet pile that is either wood or steel, below the subgrade elevation. Then the bracing is installed and proceeds with the excavation of earth. Later the water that seeps into the cofferdam area is pumped out.

The use of sumps and ditches in the dewatering of sheet excavation face the limitation similar to that of open excavations. The formation of hydraulic heave at the bottom of the excavation which is found to be very dangerous can be reduced by the driving of sheeting into the impermeable strata that is underlying. This can help in the reduction of seepage into the bottom of the excavation.

Those excavation carried out below the water table can be effectively conducted with the help of sheeting and sump. This is merely dependent on the site conditions. The hydrostatic pressure and toe support are the two factors that is to be considered important while designing the sheeting and the bracing.

The construction process and the pumping out activities can be conducted smoothly by covering the bottom of the excavation by means of a inverted sand and gravel filter blanket.

Advantages of Sumps and Ditches

The advantages of Sumps and Ditches are:

1. The method is widely used. It is appropriate for small depth lowering.
2. This method is found to be most economical one among dewatering systems while considering the installation and the maintenance procedures

3. This method can be applied for most of the soil and rock conditions.
4. The site is mostly recommended where boulders or massive obstructions are met within the ground.
5. The greatest depth up to which the water table can be lowered by this method is 8m

Disadvantages of Open Sump and Ditches

The disadvantages of this method are:

1. In areas where there is high heads or steep slopes, the method is not demanded. This method will bring collapse of the slopes and cause dangerous problems
2. The use of sumps and ditches in open or timbered excavation will bring risk in the stability of the base.

The simplest form of dewatering is sump pumping, where groundwater is allowed to enter the excavation where it is then collected in a sump and pumped away by robust solids handling pumps. Sump pumping can be effective in many circumstances, but seepage into the excavation can create the risk of instability and other construction problems.

To prevent significant groundwater seepage into the excavation and to ensure stability of excavation side slopes and base it may be necessary to lower groundwater levels in advance of excavation. This is known as **'pre-drainage'.**

Pre-drainage methods include:

1. Deep wells
2. WellPoint's
3. Eductors
4. Vacuum wells
5. Horizontal wells

Other specialist dewatering techniques are also sometimes used:

1. Relief wells
2. Artificial recharge
3. Siphon drains

The selection of the dewatering technique or techniques at a particular site or country will depend on many factors. Groundwater Engineering's team has decades of experience in dewatering projects around the world, and we provide a complete design and installation service to control your groundwater problems.

DEEP WELLS

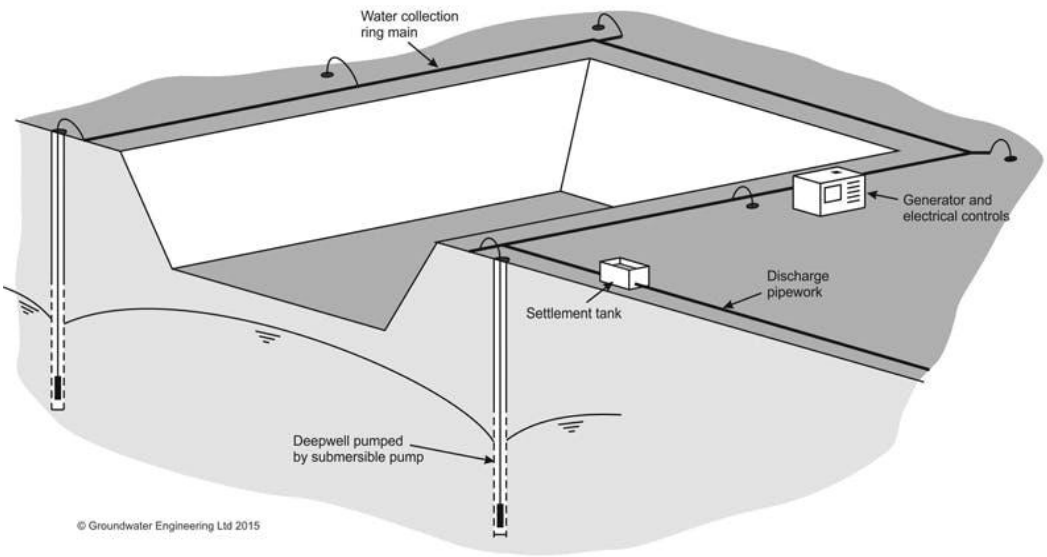

A deep well system consists of an array of bored wells pumped by submersible pumps. Pumping from each well lowers the groundwater level and creates a cone of depression or drawdown around itself. Several wells acting in combination can lower groundwater level over a wide area beneath an excavation. Because the technique does not operate on a suction principle, large drawdowns can be achieved, limited only by the depth of the wells, and the hydrogeological conditions.

The wells are generally sited just outside the area of proposed excavation, and are pumped by electric submersible pumps near the base of each well. Water collection pipes, power supply generators, electrical controls and monitoring systems are located at the surface.

This is shown in figure-1. Here the excavation can be pre*drained for the complete depth.

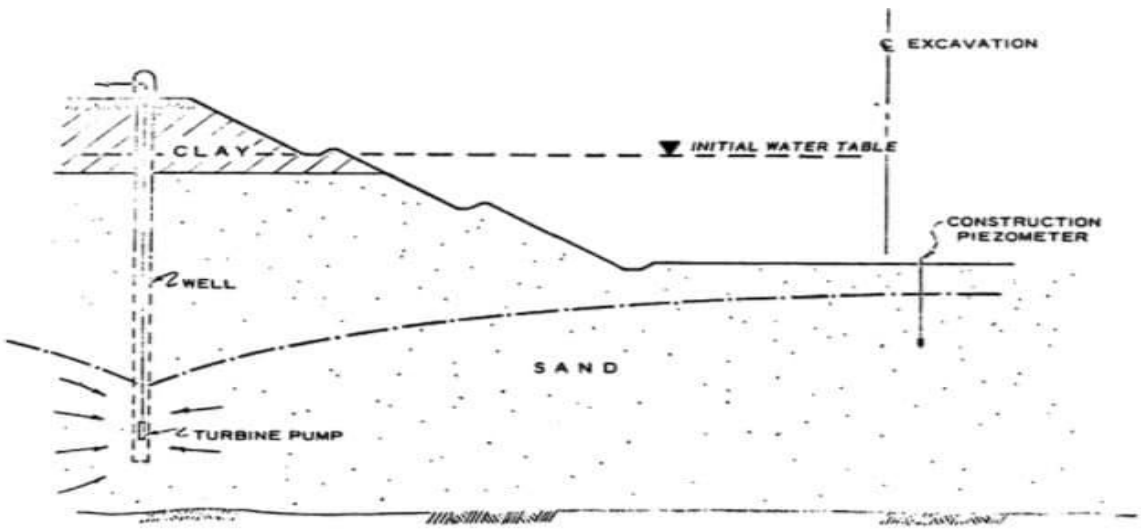

Fig.1: Deep Well Dewatering System

Working and Arrangement of Deep Well System

The deep wells arrangement for the purpose of dewatering is similar to that for commercial water wells. These systems will make use of a screen that have a diameter of 6 to 4 inches with lengths ranging up to 300 feet.

When such a system is installed, a filter is placed around the screen. This arrangement helps to prevent the infiltration of the foundation materials into the well. The installation of filter also helps to improve the yield.

In order to dewater small deep excavations, the deep well systems can be used in conjunction with the deep wells. This is applied for related works of tunnels, caissons sunk, shafts and the areas with fine grained sand or stratified soils that are pervious. In areas, there are rock layer below the ground table this method work best.

An increase in hydraulic gradient to the well because of the use of vacuum creates a vacuum within the surrounding. This phenomenon avoids seepage from the perched water into the excavation.

The installation of deep well system incorporating vacuum is shown in figure-2. This type requires adequate vacuum capacity to undergo the dewatering operation efficiently.

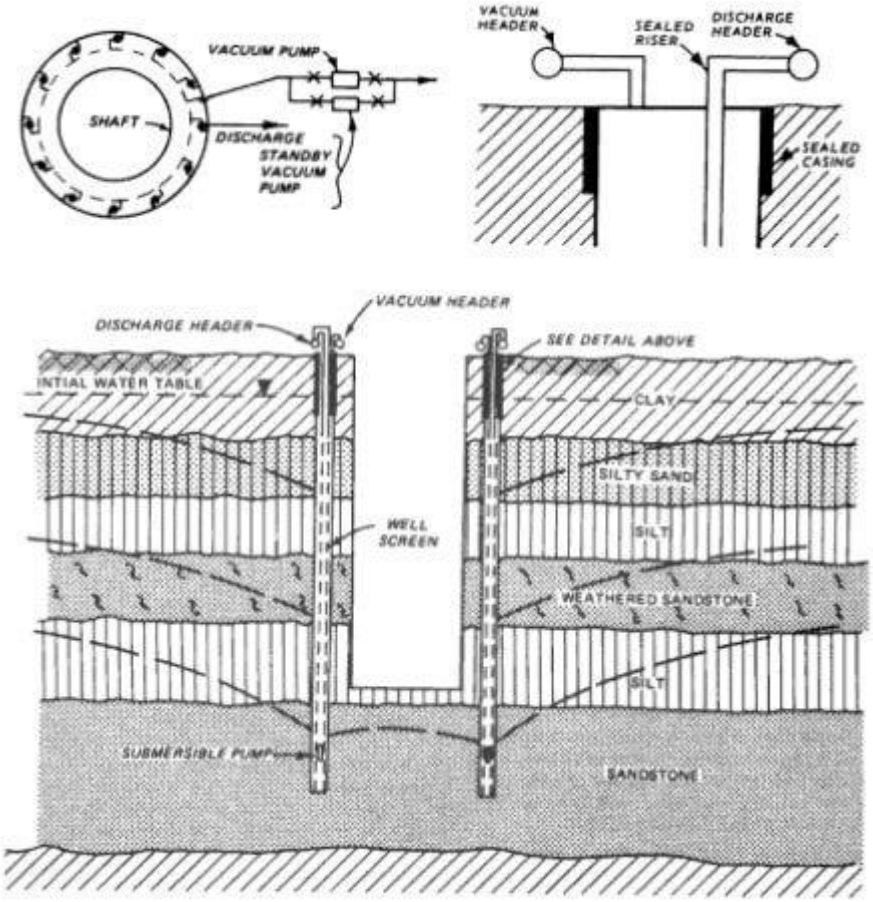

Fig.2. The use of deep well with vacuum systems to dewater a shaft over a stratified ground material.

To have sufficient wetted area of intake in the aquifer, adequate well depth have to be provided. This helps to produce yield and interactive drawdown. In most of the civil engineering applications, a depth of 60m with a typical depth value of 20m is used.

For a limited distance say 1 to 2m, the well might penetrate an impermeable layer lying below the pumped aquifer. This is to behave as sump for the fines. The pump must be placed such a level in the well so that the water circulation helps it to remain cool.

The site layout decides the spacing of the wells. But most commonly, the spacing used is 10 to 30m. The deepening of the well creates drawdown in areas. Sometimes these might be the areas where the wells cannot be sited.

Special care and precaution must be taken so that with increase in drawdown no kind of settlement is happening to the adjacent buildings.

Groundwater Engineering provides complete deep well dewatering solutions:

- Design of dewatering systems
- Well drilling and installation
- Pumping tests
- Equipment sales and rental
- Monitoring systems
- On-site operation and maintenance

WELLPOINTS

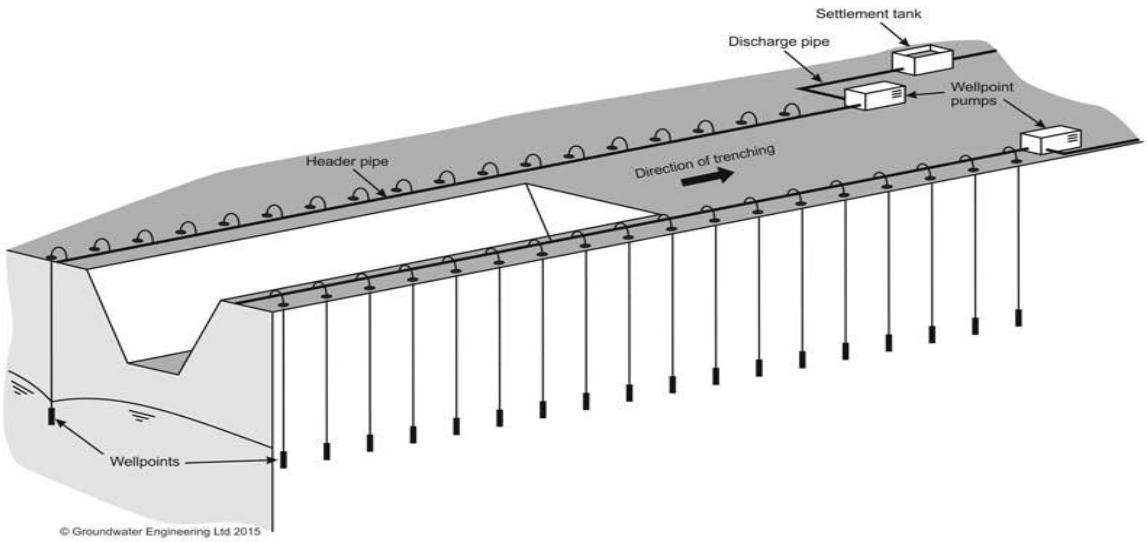

Wellpoint dewatering is widely used for excavations of shallow depths, especially for pipeline trench excavations. In appropriate ground conditions a wellpoint system can be installed speedily and made operational rapidly. A typical wellpoint system consists of a series of small diameters wells (known as wellpoints) connected via a header pipe, to the suction side of a suitable wellpoint pump. The pump creates a vacuum in the header pipe, drawing water up out of the ground. For long pipeline trenches, **horizontal wellpoints** may be installed by special trenching machines.
Wellpoints are typically installed in lines or rings around the excavation, and are pumped by diesel or electrically powered pumps, with associated header mains, water discharge pipes, power supply generators, electrical controls and monitoring systems.

There are two types of well point system, namely single stage well point system and multi-stage well point system. These systems are briefly described in the followings.

1. Single Stage Well Point system
2. Multistage Well Point system

Single Stage Well Point system – A well point consists of a pipe about 1 m long and 50 mm in diameter. It has perforations, which are covered with a screen to prevent clogging in. At

the lower end, a jetting nozzle is provided. This nozzle also acts as a drive point. A ball valve provided near the lower end allows the water to flow only in downward direction during installation of the well point. A sketch of the well point is shown in Fig.1 below. A riser pipe having the same diameter as the well point connects the well point at its bottom end. The riser pipes are connected to a horizontal pipe, known as header pipe, at the ground level. The header pipe is connected to a pumping unit. The well points are spaced every 0.6 to 1.5 The well points are installed to the required depth by jetting water through riser pipes in the downward direction. Once installed pumping is started continuously till the excavation work is completed.

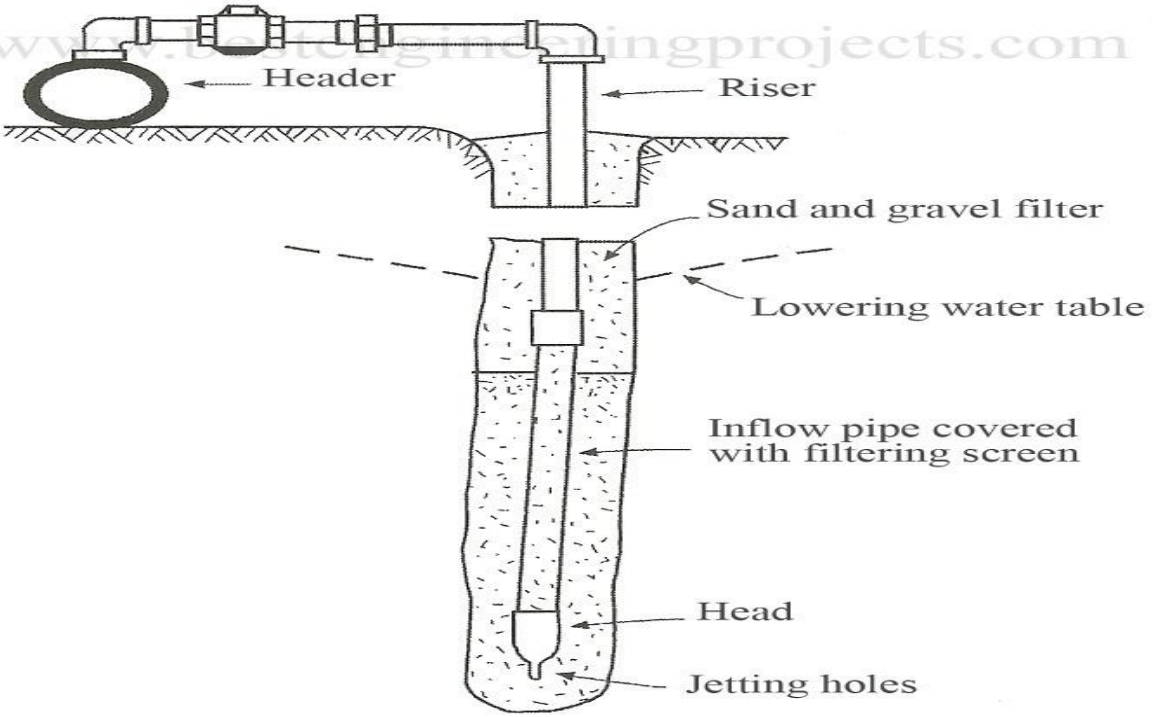

Fig 1 Single Stage Well Point

Single stage well point system is used when the depth of excavation is less than 4.5 m. They are effective in granular soils. By Single stage well point stage method the water table is lowered by about 4.5m. This method is suitable to soils having coefficient of permeability between 10^{-2} to 10^{-4} cm/sec.

Multistage Well Point system – These systems are used if excavation exceeds 4.5 m and there is a chance of slope failure. The set up of the system is shown in Fig.2.In this system the well points are installed in stages. In the first stage well points are installed to a depth of around 4.5 and put into action till the water table is lowered by about 4.5 m. Then the area is excavated up to this 4.5 m depth. After this second stages of well points are installed within the area, which is excavated already. The water table is further lowered by another 4.5 m.

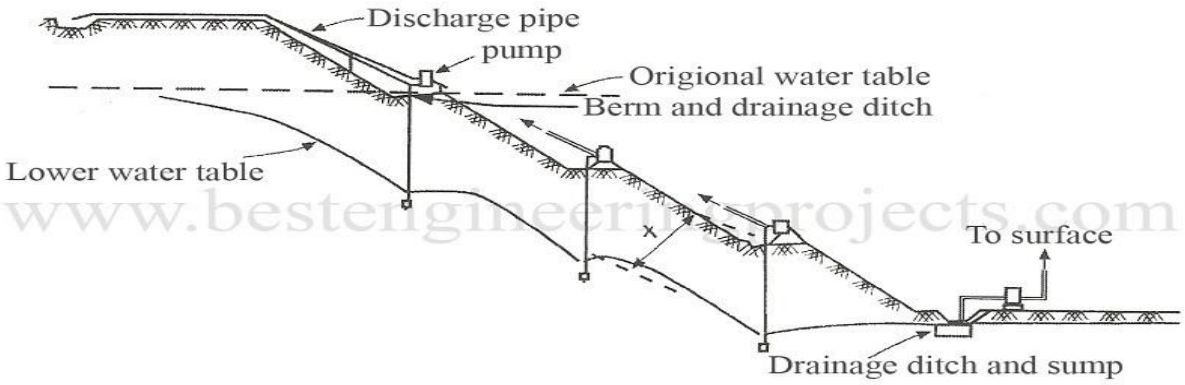

Fig 2 Multistage Well pump

In this way the excavation is carried out till the excavation reaches to about 15 m. By well point system method excavation greater than 15 m cannot be made.

Groundwater Engineering provides complete wellpoint dewatering solutions:

- Design of dewatering systems
- Wellpoint installation
- Equipment sales and rental
- Monitoring systems
- On-site operation and maintenance

EDUCTORS

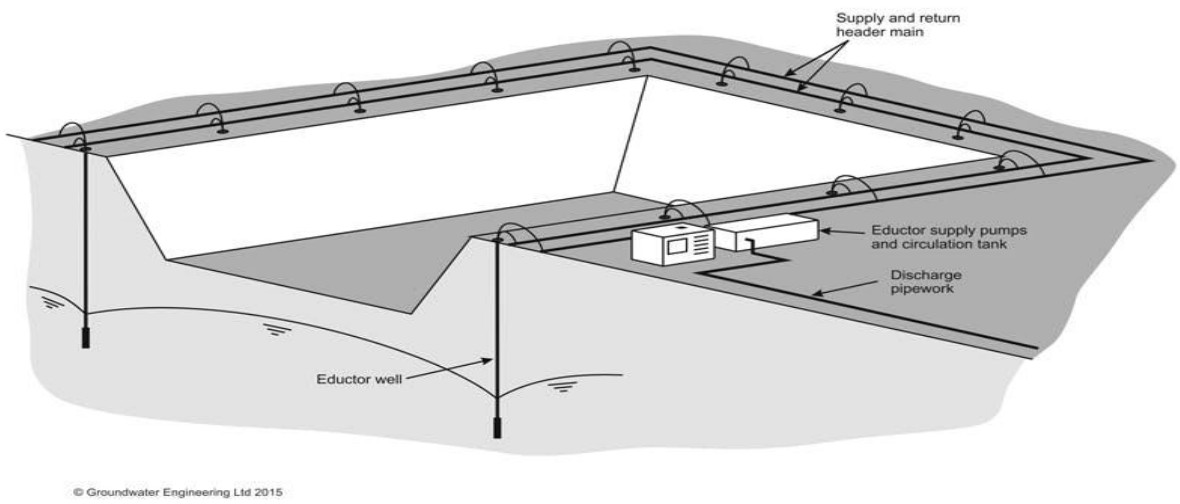

The eductor system (also known as the ejector system) is specialist technique used to control pore water pressure in low permeability soils such as very silty sands, silts, or clays with permeable fabric. Eductors are typically used to help stabilise the side slopes and base of excavations in soils that would be difficult to dewater with wellpoints or deep wells.
Eductors have the advantage that they can allow vacuum-assisted drainage, to draw water out of poorly draining fine-grained soils. The system works by circulating high pressure water (from a tank and supply pumps at ground level) down the well to a small-diameter nozzle and venturi located in the eductor in each well. This generates a vacuum of up to 9.5 m of water at the level of the eductor. The vacuum draws groundwater into the well from where it is piped back to ground level via a return riser pipe and thence through the reservoir tank back to the supply pump for recirculation.

Groundwater Engineering provides complete eductor dewatering solutions:

- Design of dewatering systems
- Well drilling and installation
- Equipment sales and rental
- Monitoring systems
- On-site operation and maintenance

VACUUM WELLS

Vacuum wells are an adaptation of **deep well** systems. Each well in the system is pumped by a submersible pumps, but a vacuum is also applied to each well via a vacuum pump located at the surface. The application of a vacuum allows the wells to be more effective in reducing pore water pressures in poorly draining fine grained soils. In appropriate ground conditions vacuum wells can be a viable alternative to **eductors**.
Groundwater Engineering provides complete vacuum well dewatering solutions:

- Design of dewatering systems
- Well drilling and installation
- Pumping tests
- Equipment sales and rental
- Monitoring systems
- On-site operation and maintenance

HORIZONTAL WELLS

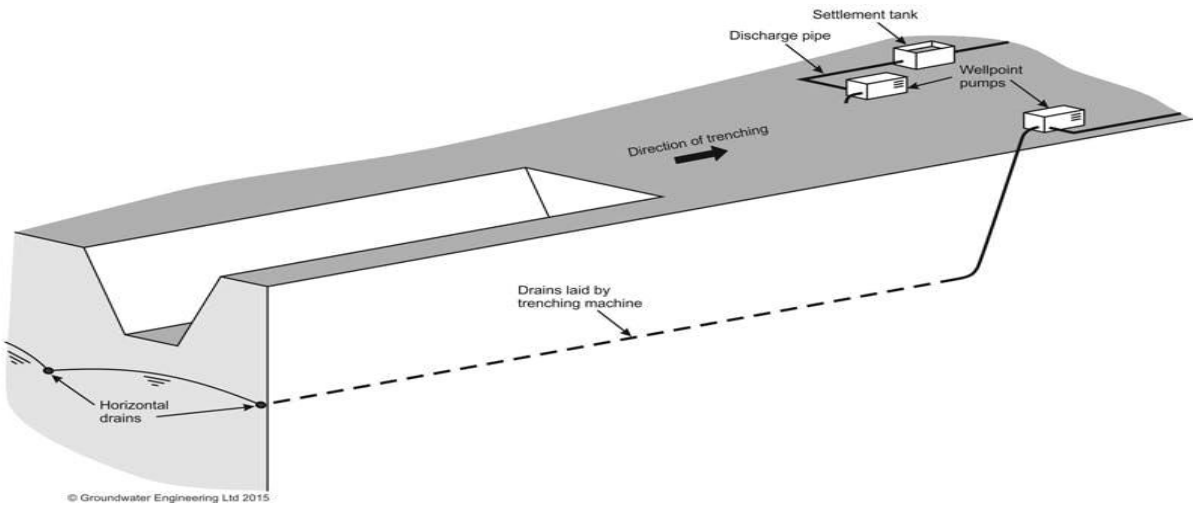

Horizontal wells for dewatering are of two principal types:

- Horizontal drains installed by specialist trenching machines
- Horizontally directionally drilled (HDD) wells.

Horizontal drains installed by specialist trenching machines

This technique uses a horizontal flexible perforated pipe, pumped by a wellpoint pump, to lower groundwater levels. The perforated pipe is installed by a special trenching machine. One end of the pipe is unperforated and is brought to the surface and connected to a wellpoint suction pump. The method can be very effective for dewatering long pipeline excavations.

Horizontally directionally drilled (HDD) wells

HDD wells are used where groundwater must be abstracted from beneath inaccessible areas or from areas where the disruption associated with surface drilling is undesirable. Applications for HDD wells include:

- Installation of permanent dewatering systems beneath existing built up (urban) environments.
- Pumping for remediation of contaminated groundwater without the risks of cross-contamination associated with vertical drilling
- Dewatering for tunnel construction
- Recharge wells to re-inject water as part of artificial recharge schemes.

Groundwater Engineering provides complete horizontal well dewatering solutions:

- Design of dewatering systems
- Well drilling and installation
- Pumping tests

- Equipment sales and rental
- Monitoring systems
- On-site operation and maintenance

Drains:

A Drain consists of filter, conduit and disposal system. A filter is necessary for continued efficiency of the drain and to prevent seepage erosion. The collection of water is done in the drain conduits. Normally the size of the conduit is 5 to 10 times larger than its hydraulic dictate. The commercial pipes have perforations of diameter 8 to 9mm and are need of 12 to 15mm gravel filter.

Classification:

a. Open drains
b. Closed drains
c. Horizontal drains
d. Foundation drains
e. Blanket drains
f. Interceptor drains

Open drains

- Drainage systems may be open or closed (subsurface), depending on the drainage method.
- In the open system, open channels are used as the regulating network, whereas in the closed system, the regulating network is made up of closed collectors and has underground drains and small channels.
- In both systems, the main conducting and protective channels are open.
- Open drainage systems are used for the initial drainage of marshes and forests and sometimes also of hayfields and pastures.
- Their drawbacks include a reduction in land available for cultivation, interference with mechanized farming operations, and overgrowth with weeds and other types of interference in the channels.

Closed drains

Closed drainage systems are technically more advanced and long lasting.

They do not have the shortcomings of open systems, and they offer great potential for irrigation of drained lands during dry periods of the growing season.

For every 30m to 50m there must be openings to flush out the pipe. At 100m to 150m intervals, the manholes must be provided at changes in direction along straight sections.

Such systems are built for intensive use of drained lands.

The Criterion For Selecting Of Fill Material Around Drains

The criteria for **selecting** material as suitable for use as fill shall be based on achieving adequate strength, stiffness and permeability after compaction. These criteria shall take account of the purpose of the fill and the requirements of any structure to be placed on it.

- Suitable fill materials include most graded natural granular materials and certain waste products such as selected colliery waste and pulverized fuel ash. Some manufactured materials, such as light aggregate, can also be used in some circumstances. Some cohesive materials may be suitable but require particular care.
- The following aspects shall be considered when selecting a fill material:

- grading;
- resistance to crushing;
- compactibility;
- plasticity;
- organic content;
- chemical aggressivity;
- pollution effects;
- solubility;
- susceptibility to volume changes (swelling clays and collapsible materials);
- the effect of frost;
- resistance to weathering;
- the effect of excavation, transportation and placement;
- the possibility of cementation occurring after placement (e.g. blast furnace slags).

- If local materials are not suitable for use as fill in their natural state it may be necessary to adopt one of the following procedures:

- adjust the water content;
- mix with cement, lime or other materials; - crush, sieve or wash;
- Protect with appropriate material; - use drainage layers.

- When the selected material contains potentially aggressive or polluting chemicals, adequate provisions shall be adopted to prevent these attacking structures or services or polluting the groundwater. Such materials shall only be used in large amounts in permanently monitored locations.

Blanket Drains

- A drainage blanket is a very permeable layer of material. It can be used to remove water from beneath pavement structures when applied as a permeable base or can be used effectively to control groundwater from cut slopes and beneath fills.
- In slope stability applications drainage blankets improve slope stability by preventing a seepage surface from developing on the slope and by providing a buttressing effect.
- Drainage blankets are also used as an interface between embankment and soft foundations to provide drainage during foundation consolidation.

- Blanket drains often require a collection system and transverse pipe under drains may be needed to outlet the blanket.

Horizontal Drains

- Horizontal drains can be relatively inexpensive and effective in lowering groundwater levels and relieving stresses on slopes, side hill fills and behind retaining structures.

  Their principle use is in slope stabilization applications.

- A horizontal drain is a perforated or slotted pipe advanced into a slope with a special auger typically at 5 degrees above horizontal. The last 10 ft of pipe should be left imperforated to assure that water flows out.

- Filter material or filter fabric should be used if clogging is expected. This can greatly extend the life of the drain but is extremely difficult to install.

- Horizontal drains should be designed by the Geotechnical Section. They are commonly installed in fan-shaped arrays of several pipes emanating from a common point.

- Construction of horizontal drains can often be complicated depending on the drilling capabilities and techniques used. Soil conditions and moisture can affect stability of borings. Horizontal and vertical controls are essential to ensure that the drains are installed as intended.
- Regular maintenance and inspection of horizontal drain installations is critical to ensure effectiveness. Horizontal drains can clog from precipitation of metals, piping of fine particles and root penetration.

- Clogged drains can sometimes be cleaned with high pressure water systems. Drains installed in unstable soil slopes which continue to move after installation can fail.

Underdrains

- Deep underdrains can be used to lower groundwater levels in slopes and intercept seepage before it can reach the slope face.

- Interceptor drains are most effective when deep enough to intercept an impervious layer below the surface. Although interceptor drains as deep as 30 feet have been constructed in Colorado, construction techniques and worker safety should be considered before recommending an underdrain.

- Often other drainage methods will need to be considered when subsurface drainage is required at greater depths. If continued movement of the slope is possible, perforated pipe in an underdrain is likely to rupture and fail.

Interconnected Belled Caisson Drains

- Interconnected belled caisson drains are usually used to lower groundwater levels on unstable slopes where depths restrict the use of underdrains.

- A caisson drill rig is used to auger a line of large diameter holes. The bottom of each hole is belled such that each hole is interconnected.

- The belled caisson holes are filled with a coarse aggregate drainage material immediately after drilling. This is done one caisson at a time until the drain is complete.

- Vertical and horizontal control is essential to ensure that continuity and positive

drainage is provided between adjacent bell sections.

Caisson drains are outlet with non-perforated pipe that is stubbed into the last caisson bell. The outlet pipe is typically larger in diameter than underdrain outlet pipe because of the large flow capacity of these drains. Interconnected belled caisson drains must be established in material which is firm enough to support them; usually shales. The use of this method is limited to those locations where this condition can be met.

Dewatering by electro osmosis

- When an external electro motive force is applied across a soild liquid interface the movable diffuse double layer is displaced tangentially with respect to the fixed layer. This is electro osmosis.
- As the surface of fine grained soil particles causes negative charge, the positive ions in solution are attracted towards the soil particles and concentrate near the surfaces.
- Upon application of the electro motive force between two electrodes in a soil medium the positive ions adjacent to the soil particles and the water molecules attached to the ions are attracted to the cathode and are repelled by the anode.
- The free water in the interior of the void spaces is carried along to the cathode by viscous flow. By making the cathode a well, water can be collected in the well and then pumped out.

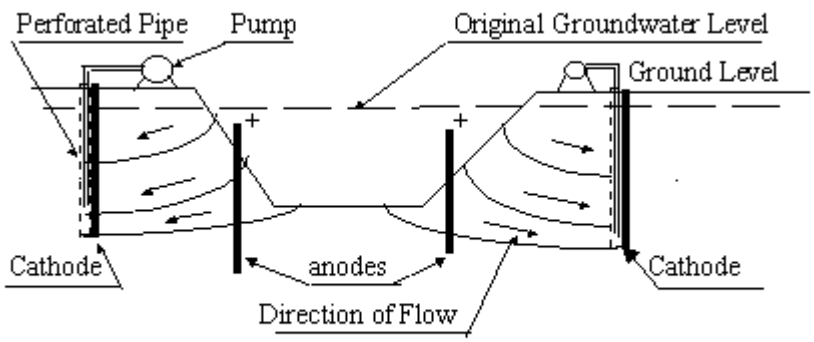

Fig. 8.8 Control of Groundwater by Electro-Osmosis Methods

SAFETY MEASURES

- Only persons wearing rubber boots should be admitted into the neighbourhood of the electrodes,
- While working between anode and cathode neither the electrode nor the wiring should be touched in such a manner that while one hand is on the electrode, the other gets into contact with the ground or with the other electrode.
- Where the excavation is carried out by machinery special attention has to be paid by the operator to avoid the occurrence of short circuits.

GROUTING

Grout is a fluid form of concrete used to fill gaps. **Grout** is generally a mixture of water, cement, and sand, and is employed in pressure **grouting**, embedding rebar in masonry walls, connecting sections of pre-cast concrete, filling voids, and sealing joints such as those between tiles.

Grouting is a high-cost treatment method and should be used where there is adequate confinement to handle the injection pressures. The typical applications include control of groundwater during construction, filling voids to prevent larger amounts of settlement, soil strengthening, stabilization of loose sands, foundation underpinning, filling voids in calcareous formations and strengthening soils for protection during excavation. Selection of the most suitable method for stabilization will depend on the type of soil, degree of improvement and depth and extent of treatment required. Another factor to consider is whether the treatment is required for a new or existing structure.

Grouting especially with some chemical grouts may present risks to the public health and environment that must be considered. Considerations for utilizing a treatment method include energy use, maintenance costs, requirements for excavation and adequate treatment performance. Environmental risks include mismanagement of surface and groundwater drainage and incomplete treatment. Leachates and migration of contaminants can contaminate subsoil, groundwater, water wells and nearby surface water unless properly managed. There are several ground barrier methods used to control seepage, which include slurry-trench cutoff walls and grout curtains.

The advantages of grouting include:

a. Can be performed on almost any ground condition
b. It doesn't induce vibration and can be controlled to avoid structural damages
c. Improvements to ground formations can be measured
d. Very useful for confined spaces and low headroom applications
e. Used for slab jacking to lift or level distorted foundations
f. Can be installed adjacent to existing walls.
g. Can be used to control seepage, groundwater flows and hazardous waste plumes

The primary **Objectives of grouting** ground formations are to:

a) Increase the strength and bearing capacity or the soil stability,

b) Reduce seepage and control groundwater during construction,

c) Form groundwater barriers and d) rehabilitate or reinforce structures.

The Different Investigation Methods Carried Out Before Grouting:

- Drilling and direct inspection to accurately locate and determine local conditions.
- Taking coring samples for laboratory tests.
- Drilling with drilling data recording to locate fissured zones, voids and the interface between structure and surrounding ground
- Borehole logging with BHTV Scanner examination (optical/seismic)
- Non-destructive geophysical investigations (seismic resistivity)
- Water testing (constant head or falling head tests conducted in borehole)
- Underground flow & temperature measurements
- Pumping test to assessment of initial hydraulic conditions.

The Applications Of Grouting

Grouting May Be Used In The Following Applications:

- Filling Voids To Prevent Excessive Settlement
- To Increase Allowable Pressure Of The Soil Both For New Structures And / Or Additions To Existing Structures.
- Control Of Groundwater Flow
- Prevention of Loose - Loose to Medium Sand Densification under Adjacent Structures (i.e. both for Vertical and Lateral Movements) Due To Adjacent Excavations, Pile Driving Etc. Ground Movement Control during Tunnelling Operations.
- Soil Strengthening To Reduce Lateral Support Requirement.
- Soil Strengthening To Increase Lateral and Vertical Resistance of Piles.
- Stabilization of Loose Sands against Liquefaction.
- Foundation Underpinning.
- Slope Stabilization.
- Volume Change Control Of Expansive Soils Through Pressure Injection Of Lime Slurry (Only For Some Expansive Soils Not All)

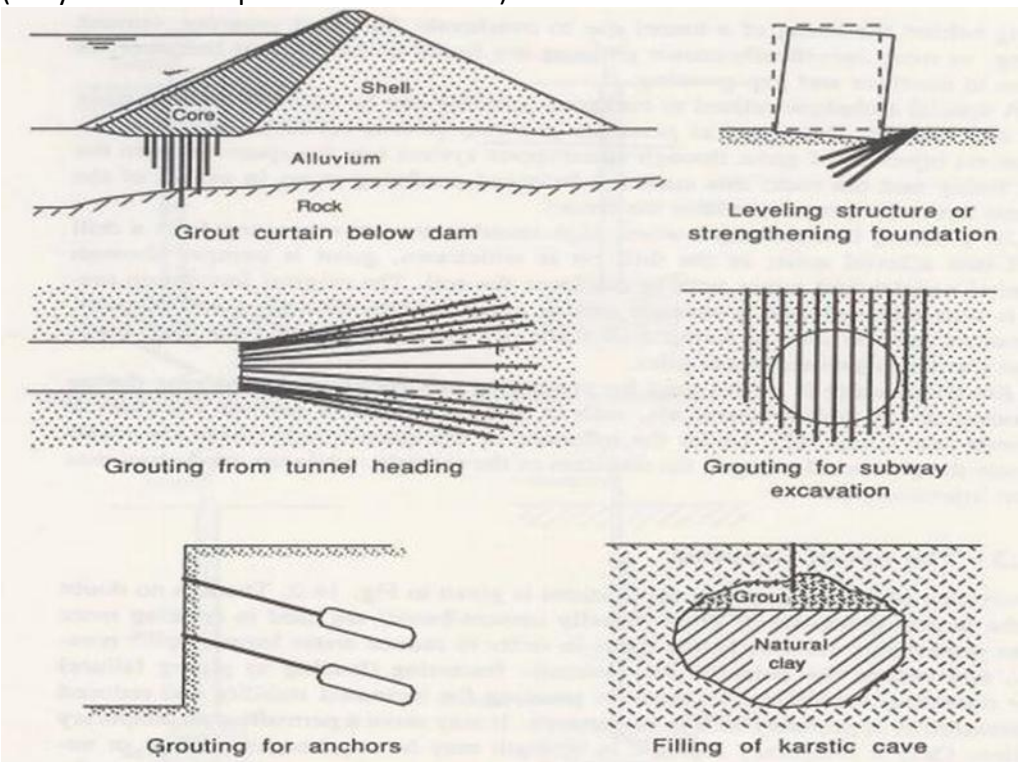

The Systematic Representation Of Different Methods Of Grouting:

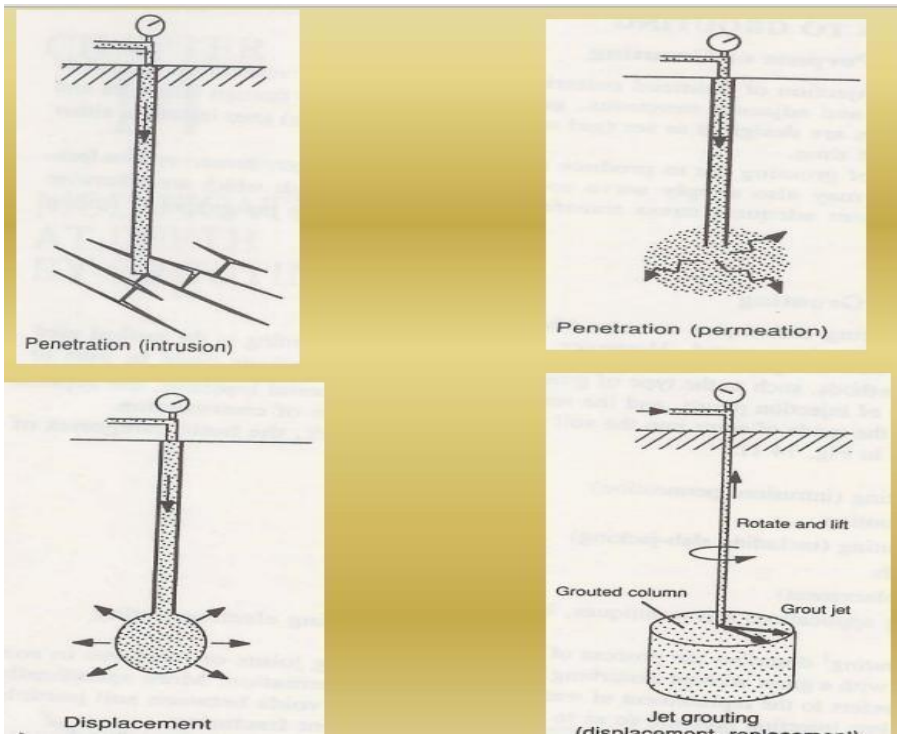

Different Grouting Materials

Grout Materials:

1. **Suspensions:** Small particles of solids are distributed in a liquid dispersion medium.

Example: cement and clay in water

2. **Emulsions:** A two phase system containing minute (colloidal) droplets of liquid in a disperse phase.

Example: bitumen and water. Foams created by emulsifying a gas into the grout material, which could be cement or an organic chemical. Foaming agents increase surface tension; assist in forming bubbles by agitation.

3. **Solutions:** Liquid homogeneous molecular mixtures of two or more substances. Example: sodium silicate, organic resins, and a wide variety of other so called chemical grouts.

Principal type of Grout:									
	State								
	Suspensions				Liquids		Aerated emulsions		
	Unstable			Stable	Chemical products				
Grout type	Cement	Bentonite + cement		Deflucculate bentonite	Sodium silicate hard gels	Sodium silicate diluted gels	Organic resins	cement foams	Organic foams
Range of uses	Fissures	Sand and Gravels k m/s					Cavities	High water flows	
		$>5\times10^{-5}$	$>10^{-5}$	$>10^{-5}$	$>10^{-5}$	$>10^{-6}$			
Grouting control	Refusal pressure	Limited Quantities					Filling		
Relative cost for the products to fill 1^{m^3} voids	4.2 (deposite) with $\gamma_d = 1.2$	1 (cement 200kg, betonite 30kg)	0.8 -1	6	2.4	10-500	1.2	10	

Classification Of Grouting

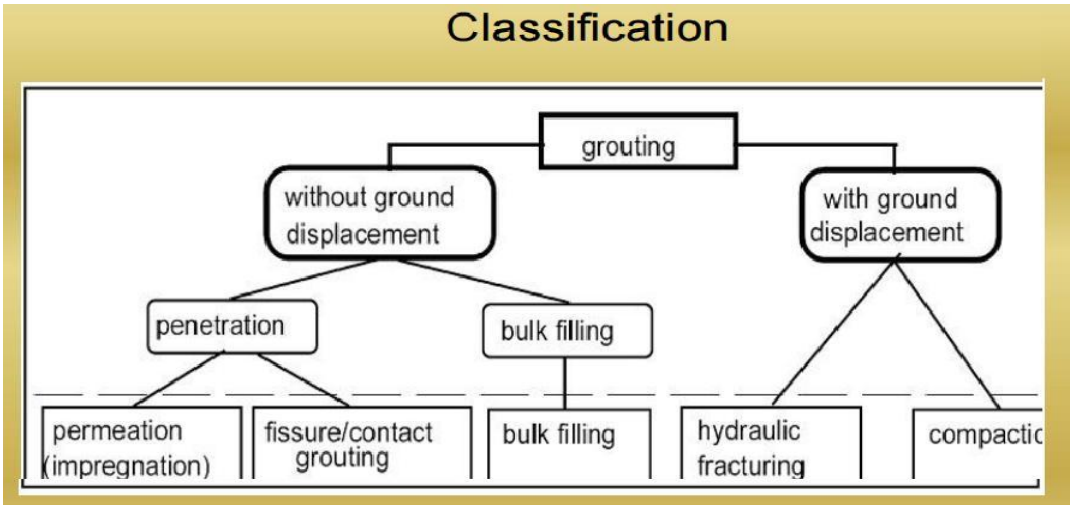

Different Types Of Grouting

Types of Grouting

- Penetration grouting or Permeation grouting
- Displacement grouting
- Compaction grouting
- Grouting of Voids
- Jet grouting
- Electro grouting

Penetration grouting or Permeation grouting

This method describes the process of filling joints or fractures in rock or pore spaces in soil with a grout without disturbing the formation

Displacement grouting

It is the injection of grout into a formation in such a manner as to move into the formation, it may be controlled, as in compaction grouting or uncontrolled. As in high pressure soil or rock grouting which leads to splitting of the ground, also called hydro fracture.

Compaction grouting

Grout mix is specifically designed so as not to permeate the soil voids or mix with the soil. Instead, it displaces the soil into which it is injected.

Jet grouting

The high-pressure water or grout is used to physically disrupt the ground, in the process modifying it and thereby improving it

Grouting of Voids

Using this process, grout is pumped under pressure into a void beneath a structure. The cavity might have been caused by a water supply or drainage line break where the soils have been washed away. It is ideal for situations during new construction or machine placement where a void cannot be easily filled without extensive rip out. To account for proper travel and strength qualities, the grout mix is custom-designed for each application.

Electro grouting

Electro grouting is a term used for promoting electrochemical hardening during electro osmosis by adding chemicals, such as sodium silicate or calcium chloride, at the anode. Under the influence of the electric field, these chemicals permeate the ground, flowing in the direction of the cathode, while the anode becomes a grout injection pipe.

Compaction Grouting

- Compaction grouting is a ground treatment technique that involves injection of a thick-consistency soil-cement grout under pressure into the soil mass, consolidating, and thereby densifying surrounding soils in place.
- The injected grout mass occupies void space created by pressure-densification.
- Pump pressure, as transmitted through low-mobility grout, produces compaction by displacing soil at depth until resisted by the weight of overlying soils.

- When injected into very dense soils or bedrock, compaction grout remains somewhat confined, since the surrounding material is quite dense.
- However, when injected into under-consolidated or poorly compacted soils, grout is able to "push" these materials aside.
- When grouting treatment is applied on a grid pattern, the result is improved compaction of displaced soils and greater uniformity of the treated soil mass.
- As a secondary benefit, the resulting grout columns add strength in the vertical axis, as typical grout compressive strengths exceed those of the surrounding soils.
- Compaction grouting applications include densification of foundation soils, raising and relieving of structures and foundation elements, mitigation of liquefaction potential, augmentation of pile capacity and pile repair, and densification of utility trench backfill soils.

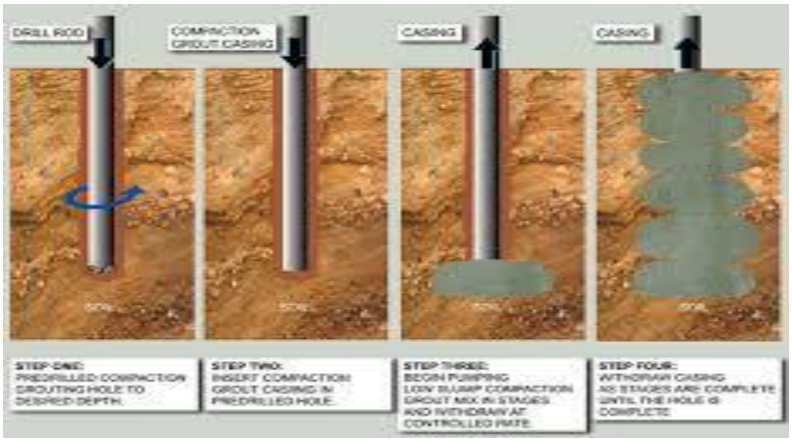

Permeation Grouting

- Permeation grouting is a term used to describe a ground treatment method in which grout is injected into a porous medium without disturbing its original structure.
- In geotechnical engineering, this usually refers to the process of filling the pores and joints in a soil and/or rock deposit to change its geotechnical properties.
- Almost any grout material may use for permeation grouting, but there are distinct limits on the grout mix used for specific types of soil or rock.
- Applications are for enhanced foundation bearing value, improvement of excavation character in sands and reduction of liquefaction potential.

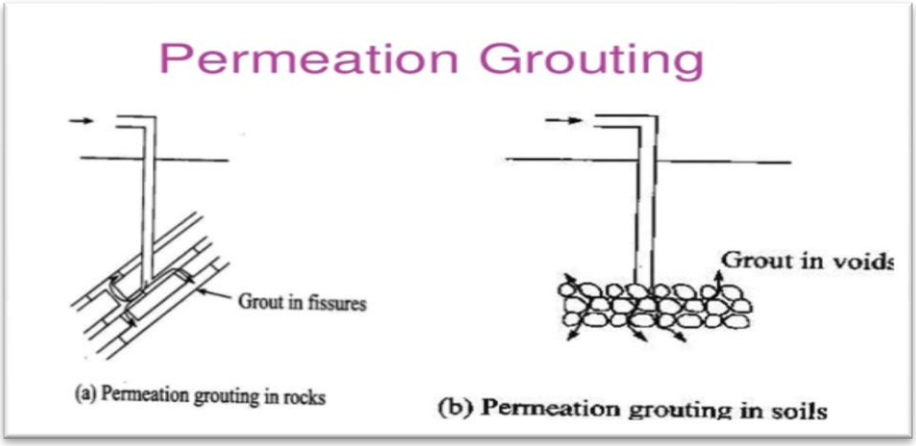

- The image shows a sample of permeation grouted sand from a project that required steep-walled footing excavations in running sands.
- The proposed excavation area was permeation grouted with a micro fine cement slurry prior to cutting footing trenches, resulting in a significant reduction in project cost. Unconfined compressive strength tests performed confirmed the improvement
- Particulate grouts are typically water-based slurries of cement, fly ash, lime or

other finely ground solids that undergo a hardening process with time.

- These materials may be used to fill pores and joints in soil and rock, provided the grout particles are small enough to be carried through the pore or joint openings.
- A good rule of thumb is that the effective particle diameter in the grout suspension should be less than the dimension of the pore or joint aperture divided by 5.
- Slurry grout mixes used for permeation grouting are designed primarily to promote passage of the grout particles into the porous medium. The grain size of the slurry is matched to the pore aperture and steps are taken to assure the grout particles are properly dispersed in the grout.
- To eliminate the effect of bleed on Portland cement grout, additives are used to hold the cement grains in suspension at water to cement ratios that would otherwise be quite unstable. The most common additive is a water suspension of bentonite. Even small amounts of bentonite increase the inter particle forces dramatically and hold the cement particles in suspension.
- **Permeation grouting** is also known as Penetration grouting.

Displacement Grouting:

Displacement grouting is the injection of grout into a formation in such a manner as to move the formation, it may be controlled, as in compaction grouting or uncontrolled, as in high-pressure soil or rock grouting which leads to splitting of the ground, also called hydro fracture.

- Displacement grouting involves the use of grout to displace soil
- Such displacement can fill voids, cap sinkholes, deal with poor soils and leave grout mass in place.
- Displacement grouting constitutes a method of introducing support elements into a soil which cannot otherwise be modified readily.
- Such grouting takes on a number of names such as pressure grouting, cement grouting, slurry grouting, all of which are designations of both grouting and grout.
- The grouts involved in Displacement grouting range from compaction grout, through low mobility non-cohesive grout, to thinner and less viscous materials.
- Many are cement based because of low cost although ground rubber, walnut shells, oyster shells, and many other available things have been used in grout, depending on the problem.

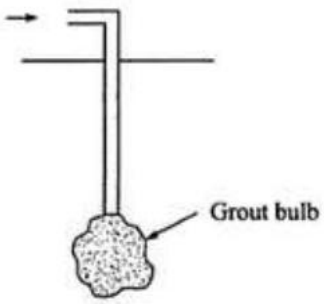

(c) Displacement (compaction) grouting

Jet Grouting

Jet grouting is a technique where high-speed water jets emanating from a drill bit cut into alluvial soils; as the drill bit is withdrawn, grout is pumped through horizontal nozzles and mixes with or displaces the soil. The original foundation material is thus replaced with a stronger and/or more impermeable grout-soil mixture. Jet grouting may be used to form cut-off walls, do underpinning, or form deep foundations similar to grouted auger piles.

- The high-pressure water or grout is used to physically disrupt the ground, in the process modifying it and there by improving it.
- Jet grouting blasts extremely high pressure fluids into the ground at ultra-high velocities. The soil is broken up and mixed with the fluids to become one mass which then hardens.
- Depending on the application and soils to be treated, one of three variations is used: the single fluid system (slurry grout jet), the double fluid system (slurry grout jet surrounded by an air jet) and the triple fluid system (water jet surrounded by an air jet, with a lower grout jet).
- The jet grouting process constructs soil create panels, full columns or anything in between (partial columns) with designed strength and permeability.
- Jet grouting has been used to underpin existing foundations, construct excavation support walls, and construct slabs to seal the bottom of planned excavations.
- Jet grouting is effective across the widest range of soil types of any grouting system, including silts and most clays. Because it is an erosion-based system, soil erodibility plays a major role in predicting geometry, quality and production.
- Cohesion less soils are typically more erodible by jet grouting than cohesive soils. Since the geometry and physical properties of the soil create are engineered, the properties of the soil create are readily and accurately predictable.
- Jet grouting's ability to construct soil create in confined spaces and around subsurface obstructions such as utilities, provides a unique degree of design Flexibility.
- Indeed, in any situation requiring control of groundwater or excavation of unstable soil (water-bearing or otherwise) jet grouting should be considered.

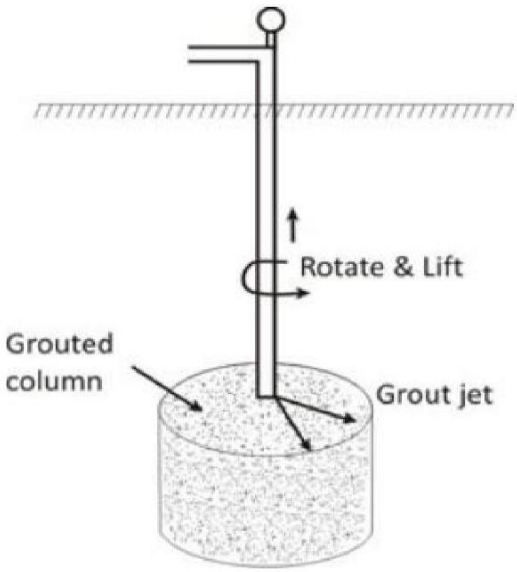

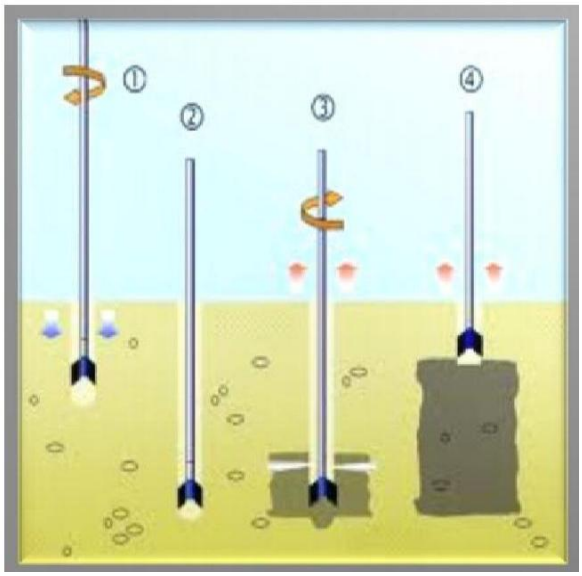

Stages in grouting flow

Grouting in stage may be in a descending or ascending direction.

In **descending method**, impregnation of the ground occurs in advance of the borehole, which is advantageous in loose soil or rock.

In **ascending technique**, grouting follows drilling as a separate phase
Water pressure testing is possible immediately prior to grouting, allowing for a choice of the most suitable grout type, pressure and quantity of grout for that particular stratum.

Following points to be taken care of:

- Minimum wastage of grout.
- Least damage to the ground.
- Maximum gain in strength or reduction in seepage.

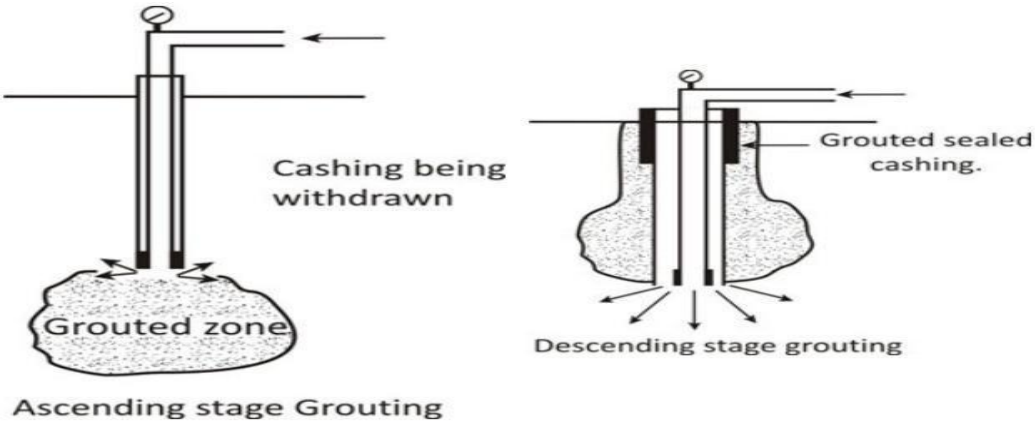

Grouting Techniques and controls

- The hole is drilled and cased
- A steel or plastic tube, slotted at regular intervals is inserted. The vertical slots are covered with a rubber sleeve.
- As the casing is withdrawn, the space between the sleeve tube and the borehole wall is sealed with a cement-bentonite grout.
- After the seal has set, the grouting tube is inserted grout exist between two packers allowing injection through selected slots with increasing pressure, the rubber sleeve bursts and grout flows into the soil.

With the sleeve tube technique, grouting can be repeated in the same hole using different viscosity grout or different chemicals in a planned sequence.

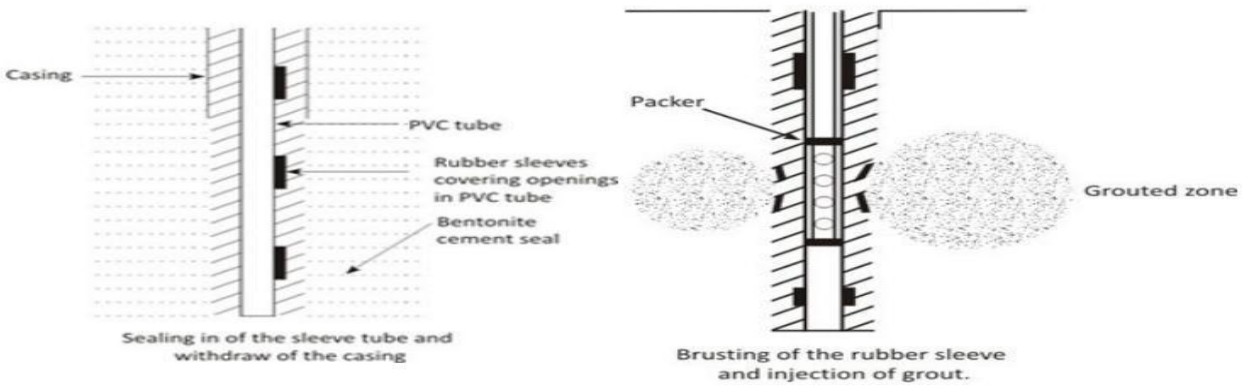

Post Grout Test

Post Grouting of anchors can significantly improve the load carrying capacity of anchors in cohesive soils by increasing the skin friction of the anchor grout body with the soil.

Post-grouting process is performed by the following stages:

- Constructing bored pile with the nowadays commonly used technology is grout spouting technology attached to the steel cage at least 2 bottom sealed steel pipe D90, symmetry through the center, along the length of the pile, 10-20cm distance from the bottom of pile
- The bottom of the pile spouting grout structure; after installing steel cages conducting concrete bored piles
- Drilling the bottom hole of two D90 steel pipes to soil under the pile tip
- Pumping high pressure water with 80-200 bar to wash bottom of the pile until the ejected water is as fresh as pumped water

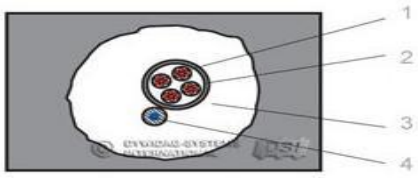

1. Strands
2. Corrugated Sheathing outer Layer of Corrosion Protection
3. Primary Grout
4. Post Grout Line

Drill Hole Section prior to Post Grouting

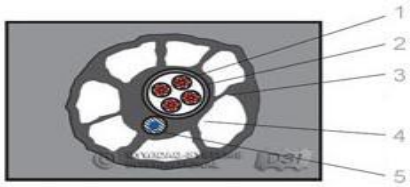

1. Strands
2. Corrugated Sheathing
3. Cement Grout Body after Post Grouting (Enlarged Grout Body)
4. Primary Grout (all Pieces)
5. Post Grout Line

Drill Hole Section after Post Grouting

IMPORTANT QUESTIONS

1. What is dewatering? Explain its importance in civil engineering works.
2. List various well point dewatering systems and explain their suitability for different soils.
3. What are the objectives of dewatering? What are the types of foundation drains?
4. Explain the electro osmosis method to control ground water in low permeable soil?
5. What is grouting? Explain in detail various field of applications of grouting.
6. Explain compaction grouting, penetration grouting and fracture grouting with neat sketches.
7. What are the properties of the grout mixes: (i) Solutions such as water glass (silicate). (ii) Emulsions such as chemical grout.
8. Explain the following grouting methods: (i) Compaction. (ii) Jet grouting.
9. Discuss briefly the important points to be considered in design of dewatering system.
10. Discuss in detail with suitable examples the field conditions which necessitate dewatering in soil.
11. What do you understand about soil stabilization by grouting? Explain in detail various fields of applications of grouting.
    (b) Describe the equipment used in the grouting technique
12. Discuss in details various well point techniques for dewatering soils.
    Explain the criteria for the selection of a particular fill material around the drains.
13. Explain briefly various methods of grouting.