UNIT-3

FUNDAMENTALS OF HARMONICS & APPLIED HARMONICS

Basic terms and definitions

Harmonic Distortion	**Refer unit-1**
Total Harmonic Distortion(THD)	The THD is a measure of the effective value of the harmonic components of a distorted waveform. That is, it is the potential heating value of the harmonics relative to the fundamental. This index can be calculated for either voltage or current: $$\mathrm{THD} = \frac{\sqrt{\sum_{h>1}^{h_{max}} M_h^2}}{M_1}$$ where *Mh* is the rms value of harmonic component *h* of the quantity *M.*
Total Demand Distortion (TDD)	$$\mathrm{TDD} = \frac{\sqrt{\sum_{h=2}^{h_{max}} I_h^2}}{I_L}$$ If THD value is referred with respect to the peak demand load current rather than the fundamental component, then it is called TDD.

Concepts:
Harmonic Distortion

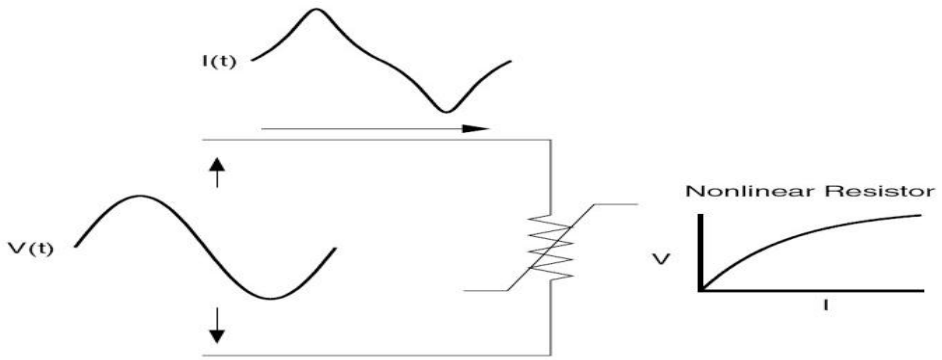

Fig 3.1 Current distortion caused by nonlinear resistance.

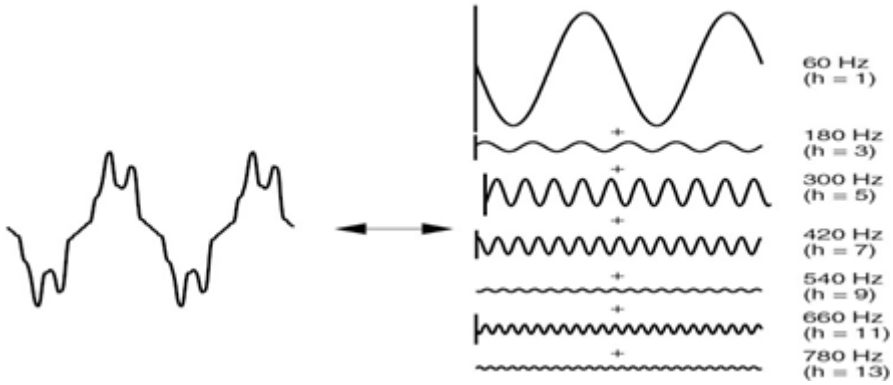

Fig 3.2 Fourier series representation of a distorted waveform.

- Harmonic distortion is caused by nonlinear devices in the power system.
- A nonlinear device is one in which the current is not proportional to the applied voltage.
- Figure 3.1 illustrates this concept by the case of a sinusoidal voltage applied to a simple nonlinear resistor in which the voltage and current vary according to the curve shown.
- While the applied voltage is perfectly sinusoidal, the resulting current is distorted. Increasing the voltage by a few percent may cause the current to double and take on a different wave shape. This is the source of most harmonic distortion in a power system.
- Figure 3.2 illustrates that any periodic, distorted waveform can be expressed as a sum of sinusoids.
- When a waveform is identical from one cycle to the next, it can be represented as a sum of pure sine waves in which the frequency of each sinusoid is an integer multiple of the fundamental frequency of the distorted wave.
- This multiple is called a harmonic of the fundamental, hence the name of this subject matter. The sum of sinusoids is referred to as a Fourier series, named after the great mathematician who discovered the concept.

Harmonics versus Transients

- Transient waveforms exhibit the high frequencies only briefly after there has been an abrupt change in the power system.
- The frequencies are not necessarily harmonics; they are the natural frequencies of the system at the time of the switching operation.
- Harmonics, by definition, occur in the steady state and are integer multiples of the fundamental frequency. The waveform distortion that produces the harmonics is present continually or at least for several seconds. Transients are usually dissipated within a few cycles.
- Transients are associated with changes in the system such as switching of a capacitor bank.
- Harmonics are associated with the continuing operation of a load.

Harmonic Sources from Commercial Loads:

1. Single-phase power supplies

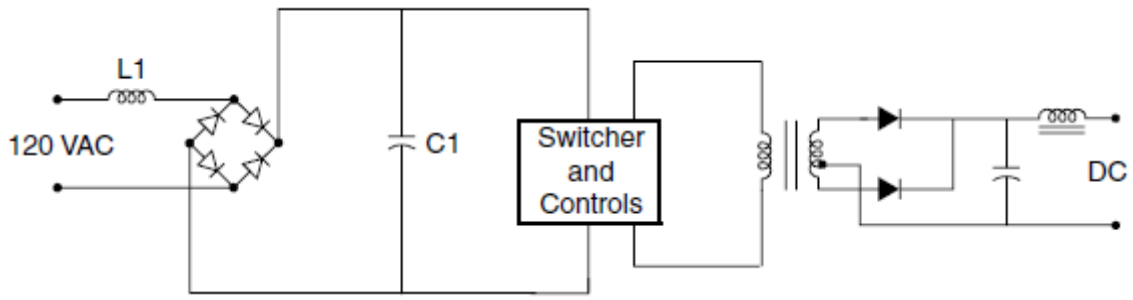

Fig 3.3 Switch-mode power supply.

- There are two common types of single-phase power supplies.
- Older technologies use ac-side voltage control methods, such as transformers, to reduce voltages to the level required for the dc bus.

- The inductance of the transformer provides a beneficial side effect by smoothing the input current waveform, reducing harmonic content.
- Newer-technology switch-mode power supplies use dc-to-dc conversion techniques to achieve a smooth dc output with small, lightweight components.
- The input diode bridge is directly connected to the ac line, eliminating the transformer. This results in a coarsely regulated dc voltage on the capacitor.
- This direct current is then converted back to alternating current at a very high frequency by the switcher and subsequently rectified again.
- Personal computers, printers, copiers, and most other single-phase electronic equipment now almost universally employ switch-mode power supplies.
- The key advantages are the light weight, compact size, efficient operation, and lack of need for a transformer.
- Switch-mode power supplies can usually tolerate large variations in input voltage.

2. Fluorescent lighting

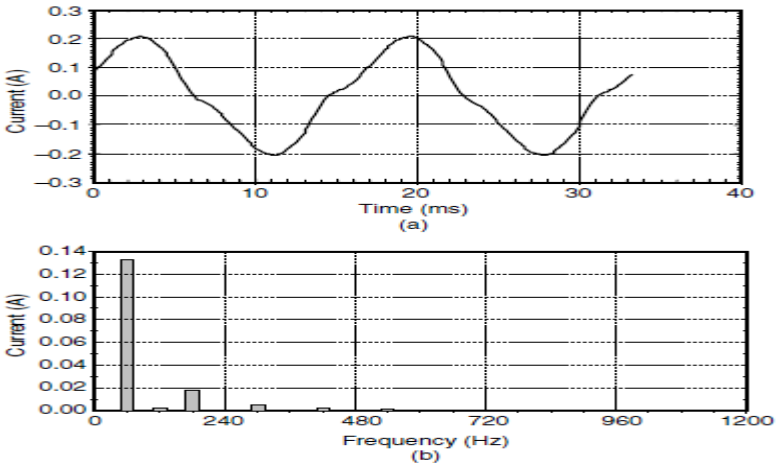

Fig 3.4 Fluorescent lamp with (*a*) magnetic ballast current waveform and (*b*) its harmonic spectrum.

- Fluorescent lights are discharge lamps; thus they require a ballast to provide a high initial voltage to initiate the discharge for the electric current to flow between two electrodes in the fluorescent tube.
- Once the discharge is established, the voltage decreases as the arc current increases. It is essentially a short circuit between the two electrodes, and the ballast has to quickly reduce the current to a level to maintain the specified lumen output.
- Thus, a ballast is also a current-limiting device in lighting applications.
- There are two types of ballasts, magnetic and electronic.
- A standard magnetic ballast is simply made up of an iron-core transformer with a capacitor encased in an insulating material.
- The iron-core magnetic ballast contributes additional heat losses, which makes it inefficient compared to an electronic ballast.

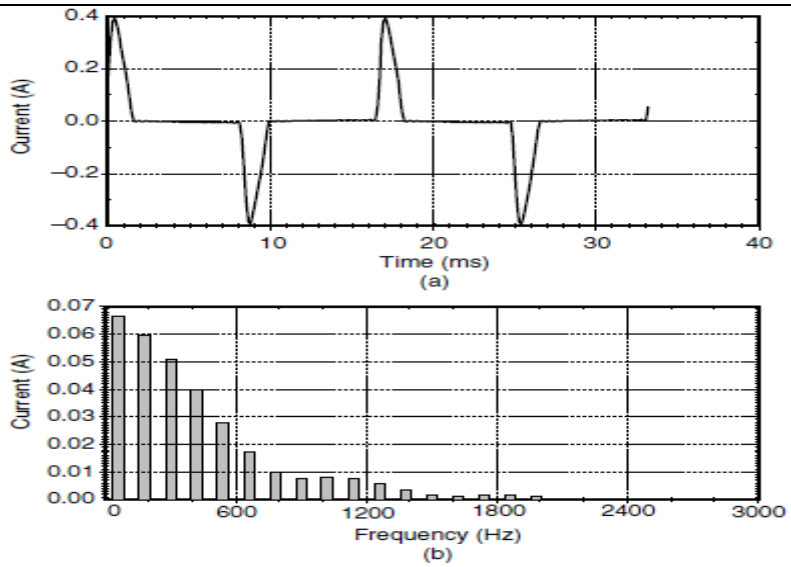

Fig 3.5 Fluorescent lamp with (a) electronic ballast current waveform and (b) its harmonic spectrum.

- Electronic ballast employs a switch-mode–type power supply to convert the incoming fundamental frequency voltage to a much higher frequency voltage typically in the range of 25 to 40 kHz.
- This high frequency has two advantages. First, a small inductor is sufficient to limit the arc current. Second, the high frequency eliminates or greatly reduces the 100- or 120-Hz flicker associated with iron-core magnetic ballast.
- A single electronic ballast typically can drive up to four fluorescent lamps.

3. Adjustable-speed drives for HVAC and elevators

- Common applications of adjustable-speed drives (ASDs) in commercial loads can be found in elevator motors and in pumps and fans in HVAC systems.
- An ASD consists of an electronic power converter that converts ac voltage and frequency into variable voltage and frequency.
- The variable voltage and frequency allows the ASD to control motor speed to match the application requirement such as slowing a pump or fan.
- ASDs also find many applications in industrial loads.

Harmonic Sources from Industrial Loads

1. Three-phase power converters

(a) DC drives.

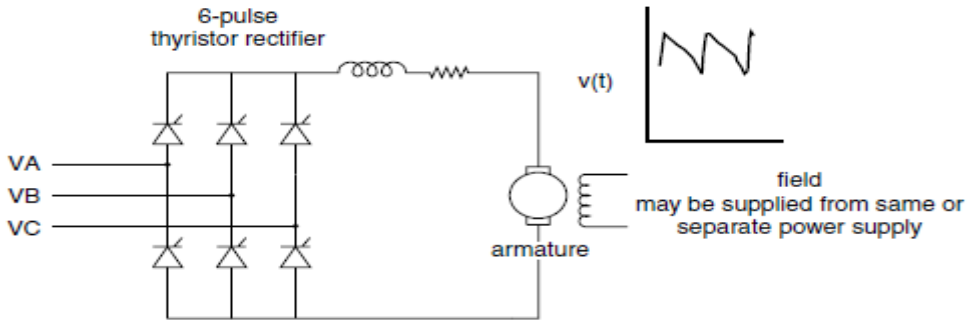

Fig 3.6 Six-pulse dc ASD.

- Compared with ac drive systems, the dc drive offers a wider speed range and higher starting torque.
- However, purchase and maintenance costs for dc motors are high.
- Most dc drives use the six-pulse rectifier shown in Fig.
- Large drives may employ a 12-pulse rectifier.

(b) AC Drives:

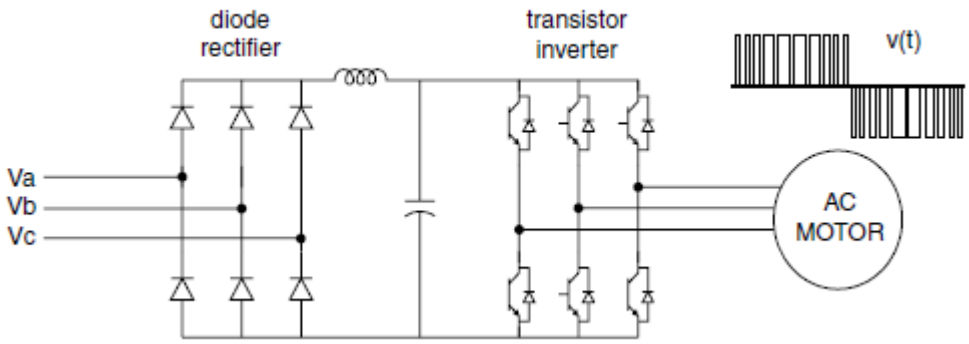

Fig 3.7 PWM ASD.

- In ac drives, the rectifier output is inverted to produce a variable-frequency ac voltage for the motor.
- Inverters are classified as voltage source inverters (VSIs) or current source inverters (CSIs).
- A VSI requires a constant dc (i.e., low-ripple) voltage input to the inverter stage.
- This is achieved with a capacitor or LC filter in the dc link.
- The CSI requires a constant current input; hence, a series inductor is placed in the dc link.
- A popular ac drive configuration uses a VSI employing PWM techniques to synthesize an ac waveform as a train of variable-width dc pulses as shown in Fig above.
- The inverter uses either SCRs, gate turnoff (GTO) thyristors, or power transistors for this purpose.
- Currently, the VSI PWM drive offers the best energy efficiency for applications over a wide speed range for drives up through at least 500 hp.
- Another advantage of PWM drives is that, unlike other types of drives, it is not necessary to vary rectifier output voltage to control motor speed.
- This allows the rectifier thyristors to be replaced with diodes, and the thyristor control circuitry to be eliminated.
- Very high power drives employ SCRs and inverters.
- These may be 6-pulse or like large dc drives, 12-pulse.
- VSI drives are limited to applications that do not require rapid changes in speed.

CSI drives have good acceleration/deceleration characteristics but require a motor with a leading power factor (synchronous or induction with capacitors) or added control circuitry to commutate the inverter thyristors.

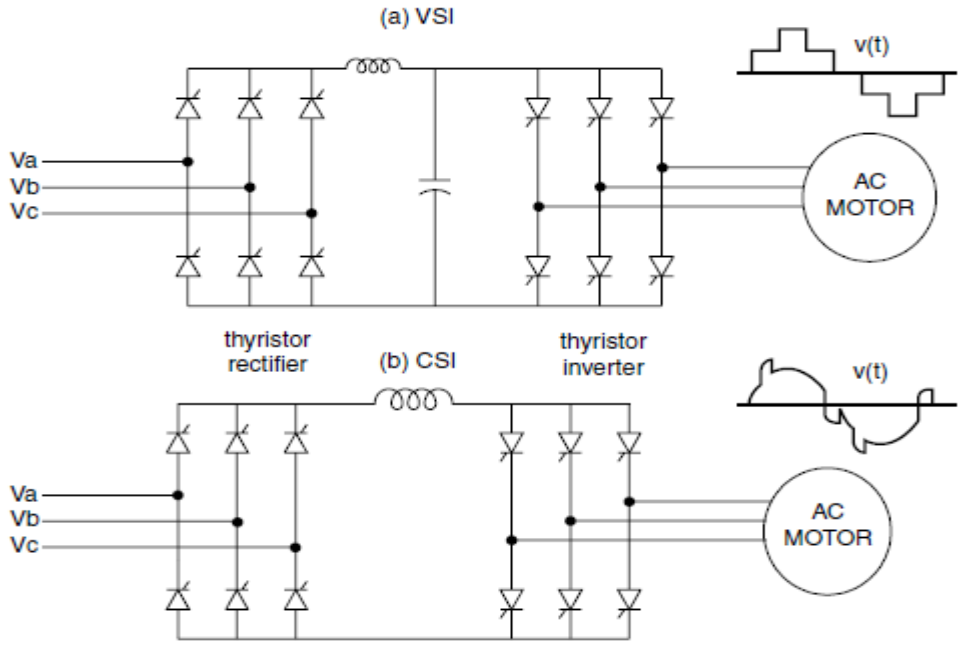

Fig 3.8 Large ac ASDs.

Impact of operating condition.

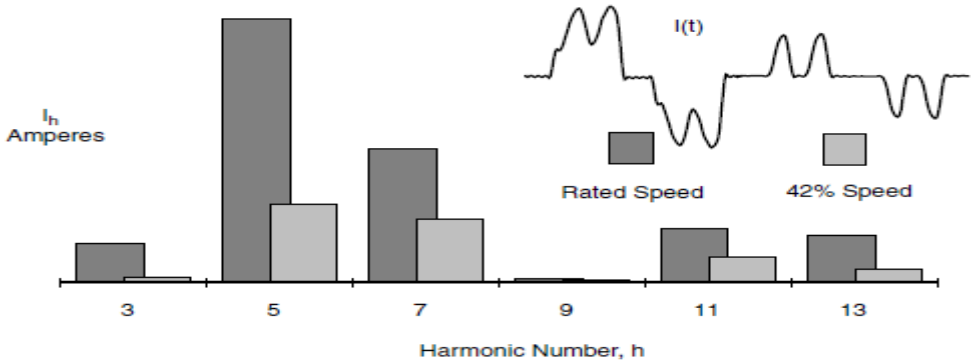

Fig 3.9 Effect of PWM ASD speed on ac current harmonics.

Fig 3.9 shows two operating conditions for a PWM adjustable speed drive.

- While the waveform at 42 percent speed is much more distorted proportionately, the drive injects considerably higher magnitude harmonic currents at rated speed.
- The bar chart shows the amount of current injected. This will be the limiting design factor, not the highest THD.

2. Arcing devices:

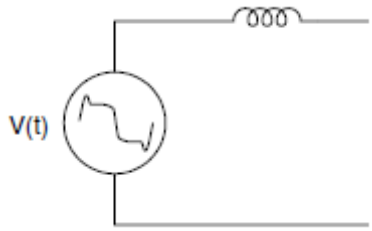

Fig 3.10 Equivalent circuit for an arcing device.

- This category includes arc furnaces, arc welders, and discharge-type lighting (fluorescent, sodium vapor, mercury vapor) with magnetic (rather than electronic) ballasts.

- As shown in Fig 3.10., the arc is basically a voltage clamp in series with a reactance that limits current to a reasonable value.
- The voltage-current characteristics of electric arcs are nonlinear.
- Following arc ignition, the voltage decreases as the arc current increases, limited only by the impedance of the power system.
- This gives the arc the appearance of having a negative resistance for a portion of its operating cycle such as in fluorescent lighting applications.
- The electric arc itself is actually best represented as a source of voltage harmonics.
- If a probe were to be placed directly across the arc, one would observe a somewhat trapezoidal waveform.
- Its magnitude is largely a function of the length of the arc.

3. Saturable devices

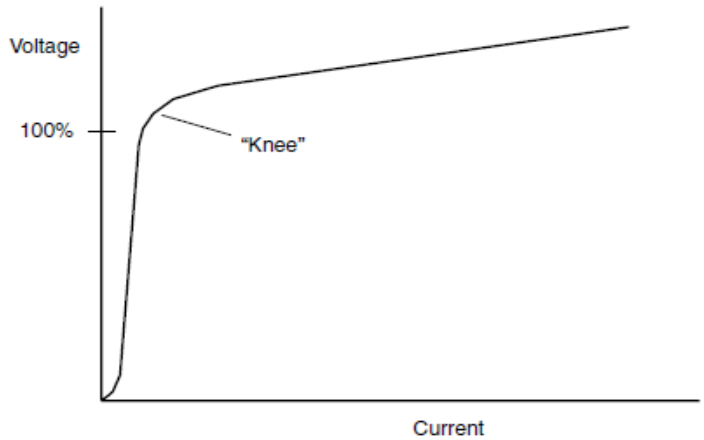

Fig 3.11 Transformer magnetizing characteristic.

- Equipment in this category includes transformers and other electromagnetic devices with a steel core, including motors.
- Harmonics are generated due to the nonlinear magnetizing characteristics of the steel as shown in Fig 3.11.
- Power transformers are designed to normally operate just below the "knee" point of the magnetizing saturation characteristic.
- The operating flux density of a transformer is selected based on a complicated optimization of steel cost, no-load losses, noise, and numerous other factors.

Harmonic Distortion Evaluations

Harmonic distortion evaluations are carried out both at the utility side and end user side.

Point of Common Coupling:

- The PCC can be located at either the primary side or the secondary side of the service transformer depending on whether or not multiple customers are supplied from the transformer.
- In other words, if multiple customers are served from the primary of the transformer, the PCC is then located at the primary. On the other hand, if multiple customers are served from the secondary of the transformer, the PCC is located at the secondary. Figure below illustrates these two possibilities.

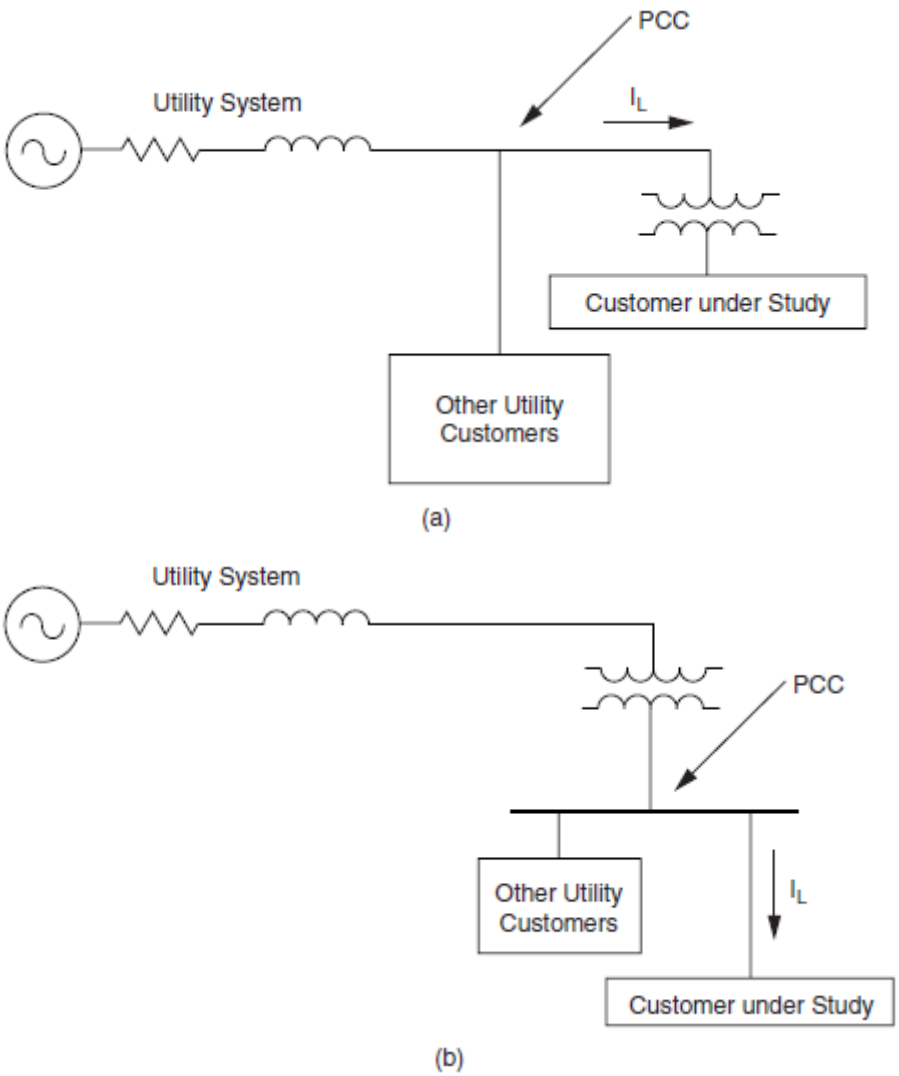

Fig 3.12 PCC selection depends on where multiple customers are served.
(a) PCC at the transformer primary where multiple customers are served.
(b) PCC at the transformer secondary where multiple customers are served.

(i) Harmonic evaluations on the utility system

Harmonic evaluations on the utility system involve procedures to determine the acceptability of the voltage distortion for all customers.

There are two important components for limiting voltage distortion levels on the overall utility system:

- Harmonic currents injected from individual end users on the system must be limited. These currents propagate toward the supply source through the system impedance, creating voltage distortion. Thus by limiting the amount of injected harmonic currents, the voltage distortion can be limited as well.
- The overall voltage distortion levels can be excessively high even if the harmonic current injections are within limits. This condition occurs primarily when one of the harmonic current frequencies is close to a system resonance frequency.

TABLE 6.1 Harmonic Voltage Distortion Limits in Percent of Nominal Fundamental Frequency Voltage

Bus voltage at PCC, V_n (kV)	Individual harmonic voltage distortion (%)	Total voltage distortion, THD_{V_n} (%)
$V_n \leq 69$	3.0	5.0
$69 < V_n \leq 161$	1.5	2.5
$V_n > 161$	1.0	1.5

SOURCE: IEEE Standard 519-1992

Voltage limit evaluation procedure

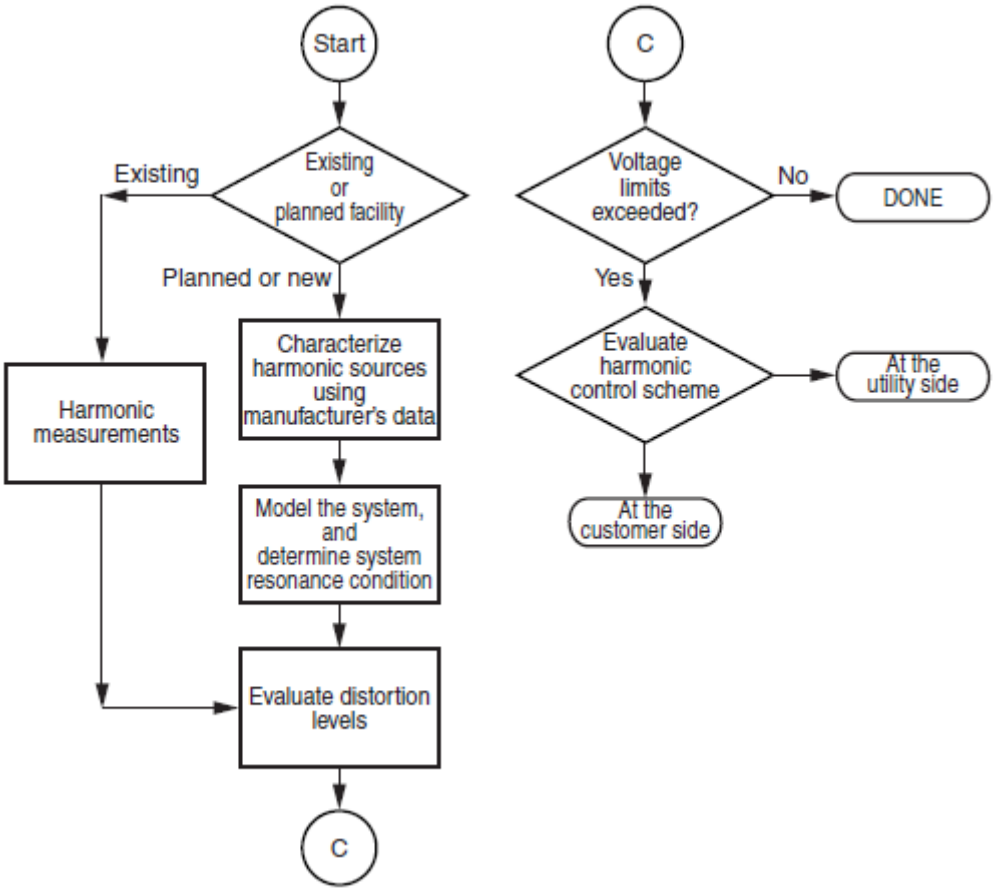

Fig 3.13 Voltage limit evaluation procedure.

1. Characterization of harmonic sources. Characteristics of harmonic sources on the system are determined with measurements for existing installations. The duration of measurements is usually at least 1 week. For new or planned installations, harmonic characteristics provided by manufacturers.

2. System modeling. The system response to the harmonic currents injected at end-user locations or by nonlinear devices on the power system is determined by developing a computer model of the system. Distribution and transmission system models are developed separately.

3. System frequency response. Possible system resonances should be determined by a frequency scan of the entire power delivery system. Frequency scans are performed for all capacitor bank configurations.

4. Evaluate expected distortion levels. The estimated harmonic sources are used with the system configuration yielding the worst-case frequency-response

characteristics to compute the highest expected harmonic distortion. This will indicate whether or not harmonic mitigation measures are necessary.

5. Evaluate harmonic control scheme. Harmonic control options consist of controlling the harmonic injection from nonlinear loads, changing the system frequency-response characteristics, or blocking the flow of harmonic currents by applying harmonic filters. Design of passive filters for some systems can be difficult because the system characteristics are constantly changing as loads vary and capacitor banks are switched.

(ii) Harmonic evaluation for end-user facilities:

IEEE Standard 519-1992 establishes harmonic current distortion limits at the PCC. The limits, summarized in Table below, are dependent on the customer load in relation to the system short-circuit capacity at the PCC.

TABLE Harmonic Current Distortion Limits (I_h) in Percent of I_L

I_{SC}/I_L	$h < 11$	$11 \le h < 17$	$17 \le h < 23$	$23 \le h < 35$	$35 \le h$	TDD
$V_n \le 69$ kV						
<20	4.0	2.0	1.5	0.6	0.3	5.0
20–50	7.0	3.5	2.5	1.0	0.5	8.0
50–100	10.0	4.5	4.0	1.5	0.7	12.0
100–1000	12.0	5.5	5.0	2.0	1.0	15.0
>1000	15.0	7.0	6.0	2.5	1.4	20.0
69 kV $< V_n \le$ 161 kV						
<20*	2.0	1.0	0.75	0.3	0.15	2.5
20–50	3.5	1.75	1.25	0.5	0.25	4.0
50–100	5.0	2.25	2.0	0.75	0.35	6.0
100–1000	6.0	2.75	2.5	1.0	0.5	7.5
>1000	7.5	3.5	3.0	1.25	0.7	10.0
$V_n >$ 161 kV						
<50	2.0	1.0	0.75	0.3	0.15	2.5
≥50	3.0	1.50	1.15	0.45	0.22	3.75

- I_h is the magnitude of individual harmonic components (rms amps).
- I_{SC} is the short-circuit current at the PCC.
- I_L is the fundamental component of the maximum demand load current at the PCC. It can be calculated as the average of the maximum monthly demand currents for the previous 12 months or it may have to be estimated.
- The individual harmonic component limits apply to the odd-harmonic components. Even-harmonic components are limited to 25 percent of the limits.
- Current distortion which results in a dc offset at the PCC is not allowed.
- The total demand distortion (TDD) is expressed in terms of the maximum demand load current, i.e.,

$$\text{TDD} = \frac{\sqrt{\sum_{2} I_h^2}}{I_L} \times 100\%$$

- If the harmonic-producing loads consist of power converters with pulse number q higher than 6, the limits indicated in Table above are increased by a factor equal to $\sqrt{q/6}$.

A procedure to determine the short-circuit ratio is as follows:

1. Determine the three-phase short-circuit duty I_{SC} at the PCC.

$$I_{SC} = \frac{1000 \times \text{MVA}}{\sqrt{3}\,\text{kV}} \quad \text{A}$$

2. Find the load average kilowatt demand P_D over the most recent 12 months. This can be found from billing information.
3. Convert the average kilowatt demand to the average demand current in amperes using the following expression:

$$I_L = \frac{\text{kW}}{\text{PF}\ \sqrt{3}\ \text{kV}} \quad \text{A}$$

4. The short-circuit ratio is now determined by:

$$\text{Short-circuit ratio} = \frac{I_{SC}}{I_L}$$

Current limit evaluation procedure.

1. Define the PCC. For industrial and commercial end users, the PCC is usually at the primary side of a service transformer supplying the facility.
2. Calculate the short-circuit ratio at the PCC and find the corresponding limits on individual harmonics and on the TDD.
3. Characterize the harmonic sources.
4. Evaluate harmonic current levels with respect to current limits using Table. If these values exceed limits, the facility does not meet the limit recommended by IEEE Standard 519-1992 and mitigation may be required.

Principles for Controlling Harmonics

There are three common causes of harmonic problems:

1. The source of harmonic currents is too great.
2. The path in which the currents flow is too long (electrically), resulting in either high voltage distortion or telephone interference.
3. The response of the system magnifies one or more harmonics to a greater degree than can be tolerated.

When a problem occurs, the basic options for controlling harmonics are:

1. Reduce the harmonic currents produced by the load.
2. Add filters to either siphon the harmonic currents off the system, block the currents from entering the system, or supply the harmonic currents locally.
3. Modify the frequency response of the system by filters, inductors, or capacitors.

Devices for controlling harmonics:

1. Passive filters:

- Passive filters are inductance, capacitance, and resistance elements configured and tuned to control harmonics.
- They are commonly used and are relatively inexpensive compared with other means for eliminating harmonic distortion.
- However, they have the disadvantage of potentially interacting adversely with the power system, and it is important to check all possible system interactions when they are designed.
- They are employed either to shunt the harmonic currents off the line or to block their flow between parts of the system by tuning the elements to create a resonance at a selected frequency.

Figure below shows several types of common filter arrangements.

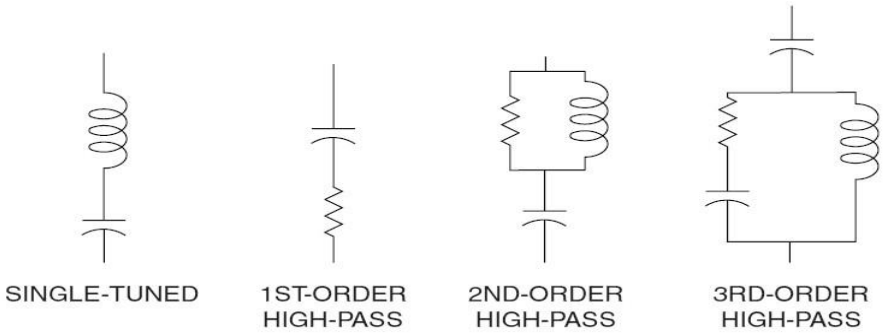

Fig 3.14: Common passive filter configurations.

(i) **SHUNT PASSIVE FILTERS:**

- The most common type of passive filter is the single tuned "notch" filter.
- This is the most economical type and is frequently sufficient for the application.
- The notch filter is series-tuned to present low impedance to a particular harmonic current and is connected in shunt with the power system. Thus, harmonic currents are diverted from their normal flow path on the line through the filter.
- Notch filters can provide power factor correction in addition to harmonic suppression.
- In fact, power factor correction capacitors may be used to make notch filters.
- An example of a common 480-V filter arrangement is illustrated in Fig below. The figure shows a delta-connected low-voltage capacitor bank converted into a filter by adding an inductance in series with the phases.
- In this case, the notch harmonic h notch is related to the fundamental frequency reactance by

$$h_{\text{notch}} = \sqrt{\frac{X_C}{3X_F}}$$

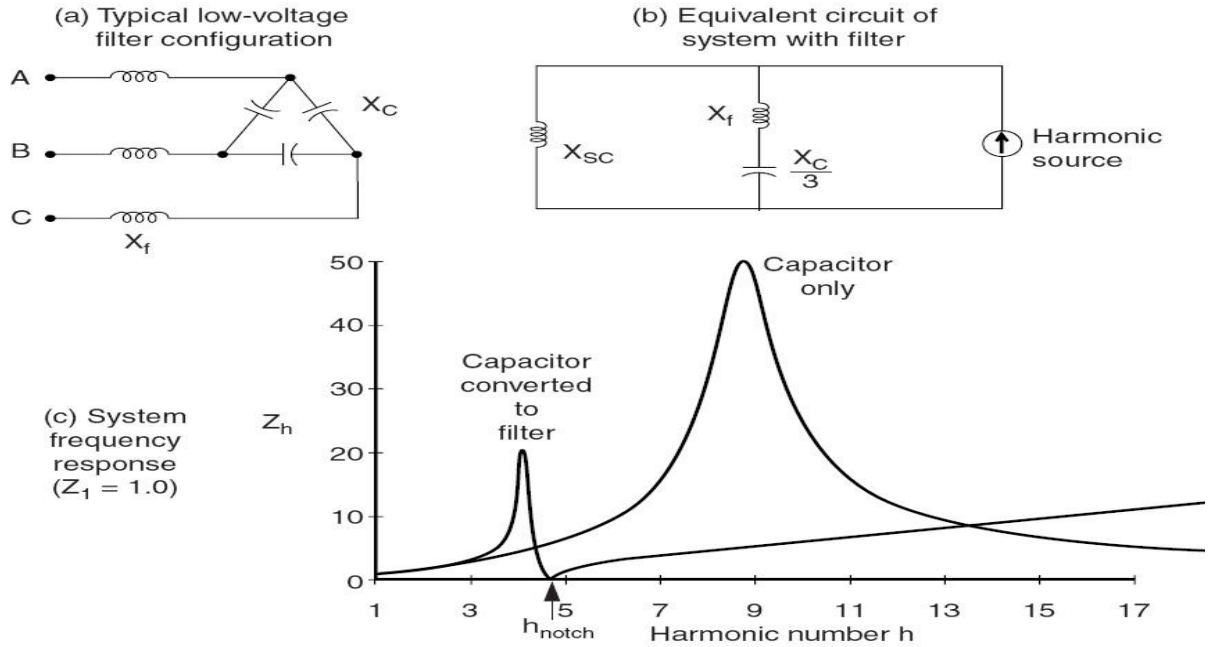

Fig 3.15: creating a fifth-harmonic notch filter and its effect on system response.

(ii) SERIES PASSIVE FILTERS:

- A series passive filter is connected in series with the load.
- The inductance and capacitance are connected in parallel and are tuned to provide high impedance at a selected harmonic frequency.
- The high impedance then blocks the flow of harmonic currents at the tuned frequency only.
- At fundamental frequency, the filter would be designed to yield low impedance, thereby allowing the fundamental current to follow with only minor additional impedance and losses.

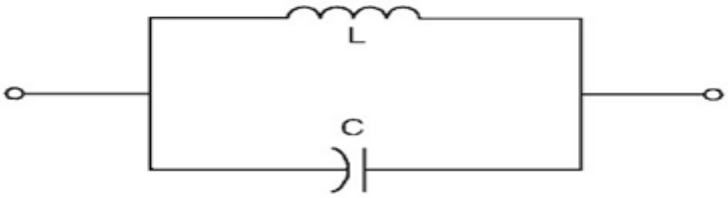

Fig 3.16 A series passive filter.

Fig above shows a typical series filter arrangement.

- Series filters are used to block a single harmonic current (such as the third harmonic) and are especially useful in a single-phase circuit where it is not possible to take advantage of zero-sequence characteristics.
- The use of the series filters is limited in blocking multiple harmonic currents.
- Each harmonic current requires a series filter tuned to that harmonic. This arrangement can create significant losses at the fundamental frequency.

Important Questions

1. Define PCC. Discuss in detail harmonic distortion evaluation procedure at utility and end user side.
2. Explain the principles of controlling harmonics. Explain in detail the operation of various devices used for controlling harmonics.
3. Discuss in detail the various harmonic sources from industrial loads.
4. Discuss in detail the various harmonic sources from commercial loads.
5. Explain how Voltage distortion is different from Current Distortion and Harmonics are different from Transients.