Code: 15A01502

R15

B.Tech III Year I Semester (R15) Regular & Supplementary Examinations November/December 2019

ESTIMATION, COSTING & VALUATION

(Civil Engineering)

Time: 3 hours Max. Marks: 70

PART – A

(Compulsory Question)

*****

1 Answer the following: (10 X 02 = 20 Marks)

(a) State the difference between detailed estimation and abstract estimation.
(b) State the need for quantity surveying.
(c) What is the difference between seigniorage and cess charges?
(d) Write a short note on depreciation.
(e) What are the various methods used for computing the earthworks?
(f) What is lead in earthwork of canal works?
(g) What is contract document, explain and State its importance.
(h) Write short note on lump-sum contract.
(i) What is salvage value? Explain.
(j) What is the significance of standard schedule of rates?

PART – B

(Answer all five units, 5 X 10 = 50 Marks)

UNIT – I

2 Write down specifications for: (i) Painting. (ii) Plastering. (iii) RCC works. (iv) White washing.

OR

3 Write the general specifications for the following items of work: (i) D.P.C 2.5 cm thick. (ii) Cement concrete in roof terracing. (iii) Reinforced brick work.

UNIT – II

4 Estimate the quantities of the following items from the plan and section as shown below:
(i) Earth work in filling. (ii) Flooring. (All dimensions are in mm)

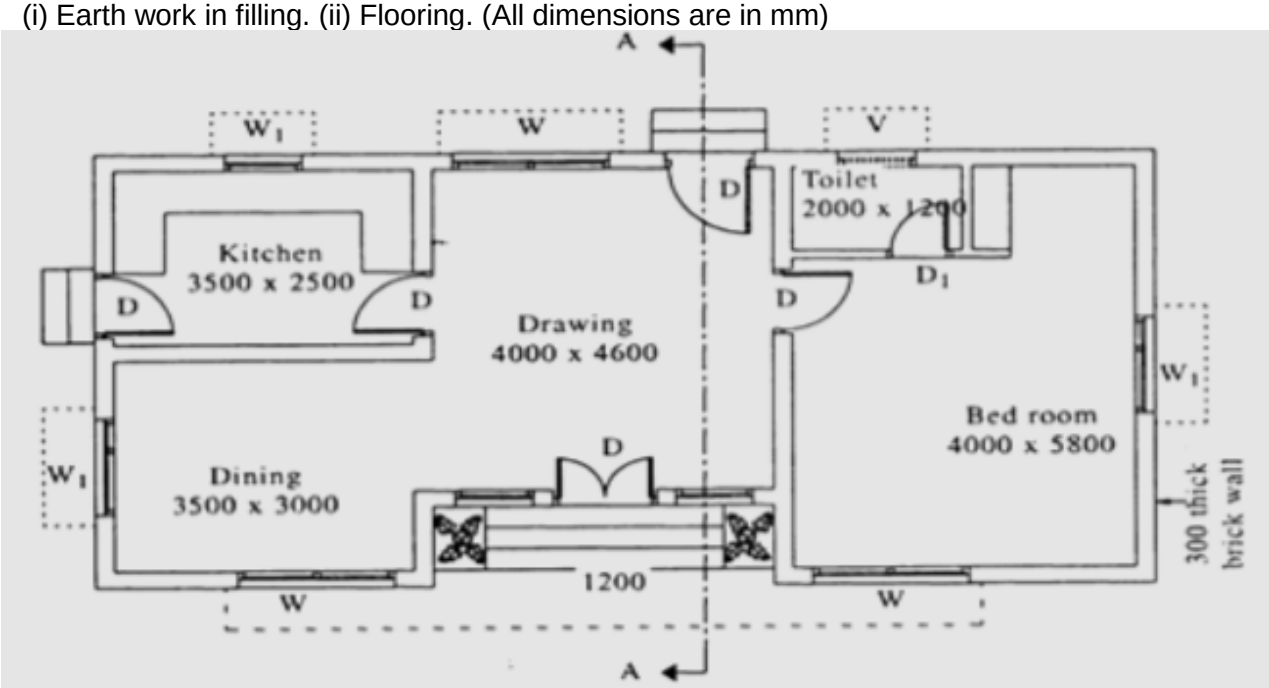

PLAN

Contd. in page 2

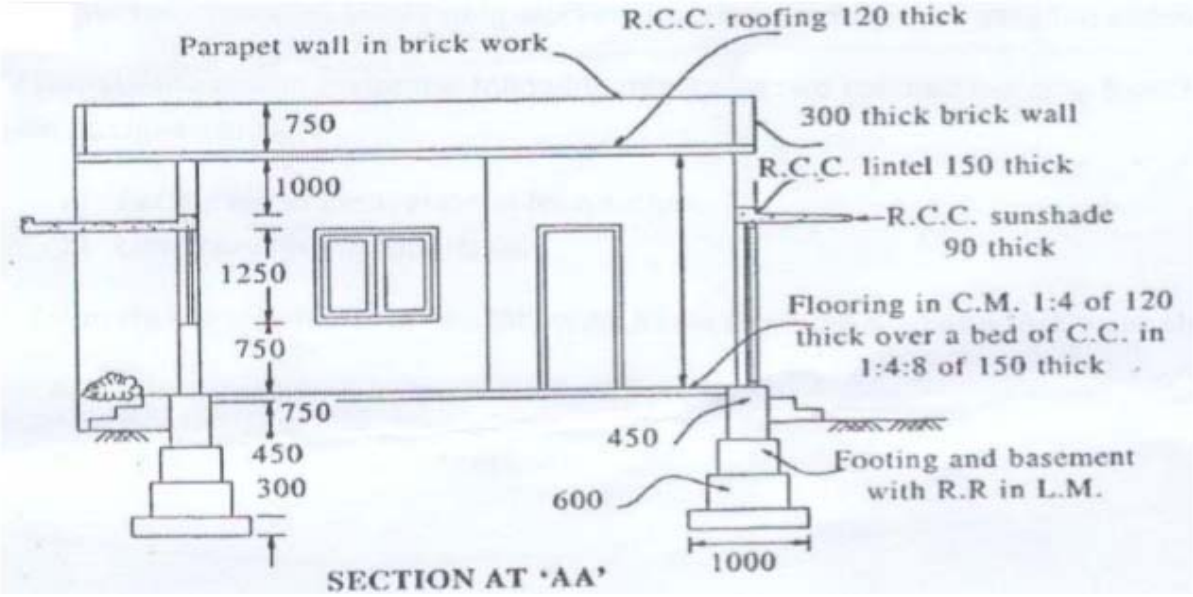

OR

5 Calculate the quantities of the following items for the building shown in figure below using long wall and short wall method: (i) Earth work in excavation. (ii) Brick work in foundation and plinth. (iii) PCC (1: 5: 10) below the foundation. (iv) Damp proof course. (v) Brick masonry in CM (1:6) for super structure.

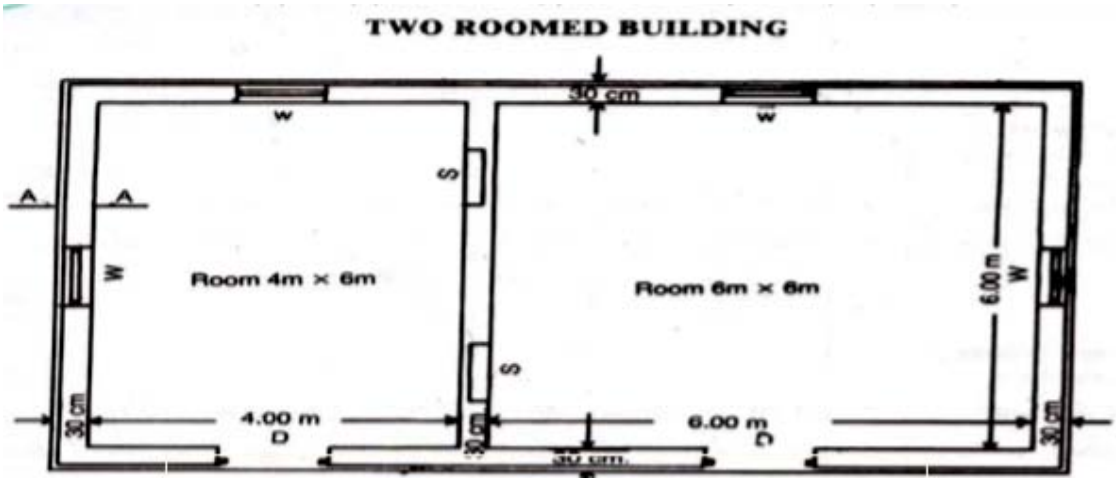

PLAN

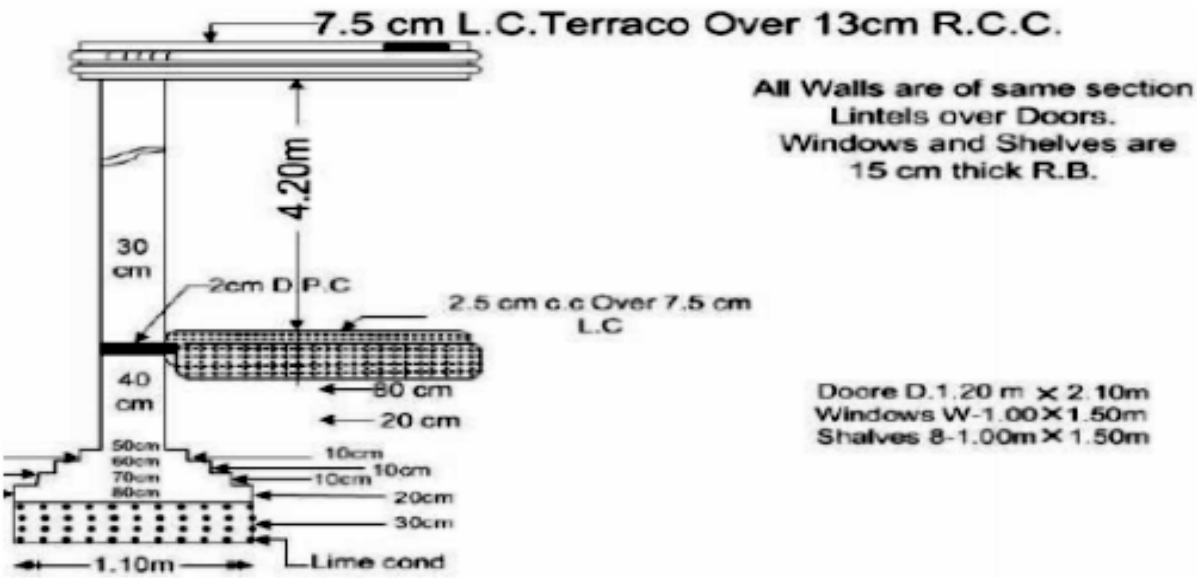

SECTION AT A-A

Contd. in page 3

UNIT – III

6 Work out the total quantity of steel reinforcement (mild steel) in the figure shown below. The thickness of supporting wall is 30 cm.

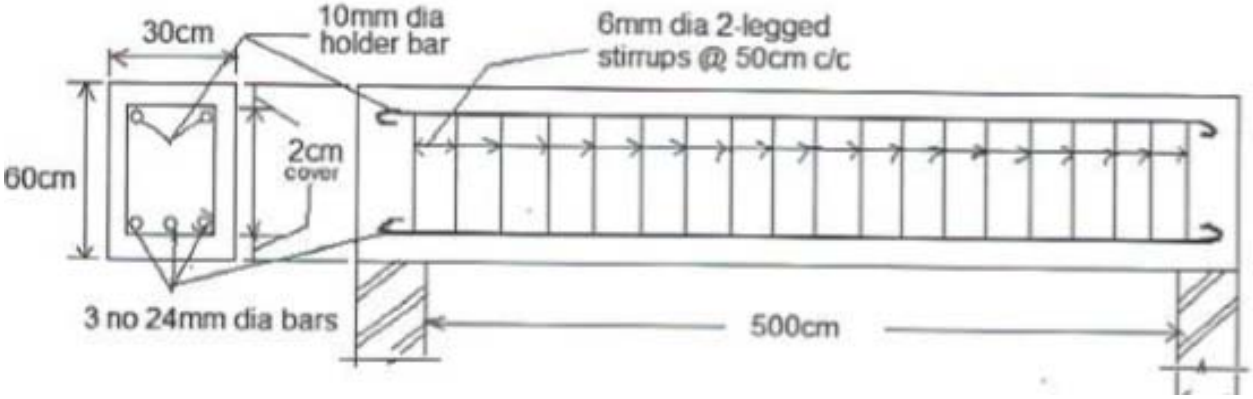

OR

7 Prepare a detailed estimate for earth work for a portion of a road from the following data:
The formation level at starting point is 119 m. Formation width of road is 7.5 m and side slopes of banking are 2:1. The road is in downward gradient of 1 in 160 up to 180 m and then gradient changes to 1 in 120 downward.

Distance in m	0	30	60	90	120	150
R L of ground	115.5	116.75	117.25	118.20	116.10	116.25
Distance in m	180	210	240	270	300	330
R L of ground	117.25	118.30	118.10	117.80	117.25	117.10

UNIT – IV

8 What are the contents of a tender document? Enumerate the complete tendering procedure with illustrations.

OR

9 What is contract? What do you mean by contract system and also explain its types?

UNIT – V

10 (a) What is rate analysis? Explain the purpose of rate analysis.
(b) Define valuation and explain the purpose of valuation.

OR

11 Prepare analysis of rates for the following item of work.
First class brick work in superstructure of 1:3 lime cement mortar- unit 1 cu.m.
Assume materials and labour at the market rate.

*****